CODE COUNCIL
TRAINING

2009
2012
2015

2015 IRC® Transition from the 2009 IRC®

Based on the International Residential Code® (IRC®)

INTERNATIONAL CODE COUNCIL®

2015 IRC Transition from the 2009 IRC

Second Printing: May 2015

COPYRIGHT © 2015
by
International Code Council, Inc.

ALL RIGHTS RESERVED. The 2015 IRC Transition from the 2009 IRC is a copyrighted work owned by the International Code Council, Inc. Without advance written permission from the copyright owner, no part of this book may be reproduced, distributed, or transmitted in any form or by any means, including, without limitation, electronic, optical or mechanical means (by way of example and not limitation, photocopying, or recording by or in an information storage retrieval system). For information on permission to copy material exceeding fair use, please contact: ICC Publications, 4051 Flossmoor Road, Country Club Hills, IL 60478. Phone 1-888-ICC-SAFE (422-7233).

Trademarks: "International Code Council," the "International Code Council" logo, the "IRC" and the "International Residential Code" are trademarks of the International Code Council, Inc.

PRINTED IN THE U.S.A.

INTERNATIONAL CODE COUNCIL®

Copyright to, or licensed by, ICC (ALL RIGHTS RESERVED); accessed by Peter McLaughlin on May 27, 2015 11:08:58 PM pursuant to License Agreement. No further reproductions authorized.

2015 International Residential Code –Transition from the 2009 IRC

Topic	2012	2015
Part 1 Scope and Administration (Chapter 1)		
Scope – Accessory Structures		**R101.2** The maximum height for accessory structures has been increased from two to three stories above grade plane. Technical requirements have been removed from the definition, and accessory structures are now permitted to be unlimited in area.
Alternative Materials, Design, and Methods of Construction and Equipment		**R104.11** When proposed alternatives are not approved, the reason for the disapproval must be stated in writing by the building official.
Fences Exempt from Permit	**R105.2** Fences up to 7 feet high are exempt from permit requirements.	
Existing Buildings in Flood Hazard Areas		**R105.3.1.1** Determination of substantial improvement for existing buildings in flood hazard areas is the responsibility of the building official. The related provisions are now consolidated in Section R105.3.1.1.
Information for Construction in Flood Hazard Areas		**R106.1.4** Construction documents for dwellings in Coastal A Zones shall include the elevation of the bottom of the lowest horizontal structural member.
Part 2 Building Planning (Chapter 3)		
Climatic and Geographic Design Criteria		**Table R301.2(1)** The jurisdiction must indicate if it contains special wind regions or wind borne debris zones.
Wind Design Criteria	**R301.2.1** A new map indicates the geographic locations that require wind design, which means an engineered design in accordance with the IBC or ASCE 7, or a design in accordance with the applicable provisions of ICC-600, the WFCM, or AISI S230.	**R301.2** Ultimate design wind speed values replace basic wind speed values for 3-sec gust wind speeds in Section R301.2.2. A wind speed conversion table has been added for conversion from ultimate design to nominal design wind speeds.
Sunrooms		**R301.2.1.1.1** The 2015 IRC requires sunrooms to comply with AAMA/NPEA/NSA 2100-12. The standard contains requirements for habitable and non-habitable sunrooms.
Protection of Openings in Wind Borne Debris Regions		**R301.2.1.2** The mean roof height limit has been increased from 33 feet to 45 feet for the prescriptive attachment provisions for wood structural panels protecting glazing. The ASTM E 1996 standard has been modified to classify wind zones according to ultimate design wind speed.
Wind Exposure Category		**R301.2.1.4** Wind Exposure Category A has been deleted because it no longer exists in the IBC and ASEC 7, which is the basis for determination of wind exposure categories. Wind Exposure Category D now applies to open water, mud and salt flats, and unbroken ice fields, which includes hurricane-prone regions.

INTERNATIONAL CODE COUNCIL®
Copyright to, or licensed by, ICC (ALL RIGHTS RESERVED); accessed by Peter McLaughlin on May 27, 2015 11:08:58 PM pursuant to License Agreement. No further reproductions authorized.

Topic	2012	2015
Part 2 Building Planning (Chapter 3), Continued		
Floodplain Construction		**R301.2.4** Buildings located in a flood hazard area must comply with the provisions for the most restrictive flood hazard area and may use ASCE 24 for design.
Story Height		**R301.3** Story height of wood and steel wall framing, insulated concrete, and SIP walls may not exceed 11ft, 7in. Masonry wall height is limited to 13ft 7in.
Exterior Walls	**R302.1** The minimum clearances to lot lines have been reduced from 5 feet to 3 feet for unrated exterior walls when the dwelling is protected with a fire sprinkler system. The code now permits construction of unrated exterior walls on the lot line when all dwellings in the subdivision are protected with automatic fire sprinkler systems and the opposing lot maintains a minimum 6-foot clearance from the common lot line.	**R302.1** Unprotected roof overhangs are now permitted to project to within 2ft of the property line when fireblocking is installed between the top of the wall and the roof sheathing. In most cases, projections are not permitted less than 2ft from the property line. For dwellings with or without fire sprinkler protection, penetrations of exterior walls do not require fire-resistant protection unless they are located less than 3ft from the property line.

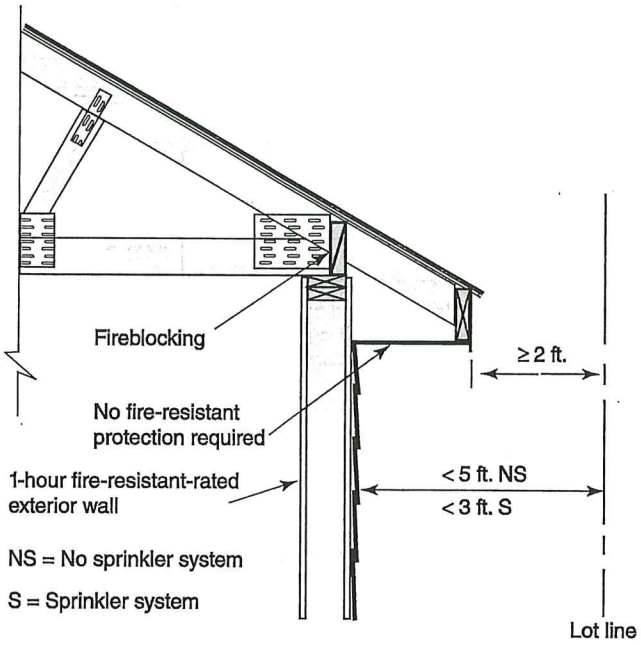

INTERNATIONAL CODE COUNCIL®
Copyright to, or licensed by, ICC (ALL RIGHTS RESERVED); accessed by Peter McLaughlin on May 27, 2015 11:08:58 PM pursuant to License Agreement. No further reproductions authorized.

Topic	2012	2015
Part 2 Building Planning (Chapter 3), Continued		
Townhouse Separation R302.2.2 Parapet Exception	**R302.2** When a parapet is not installed, openings and penetrations of the roof are no longer permitted within 4 feet of the separating wall between townhouse dwelling units.	**R302.2** The provisions for separating townhouses with structurally independent fire-resistant-rated walls in accordance with Section R302.1 have been removed in favor of the common wall provisions of Section R302.2. Common walls separating townhouses must now be rated for 2hrs when an automatic fire sprinkler system is not installed in the townhouse dwelling units.

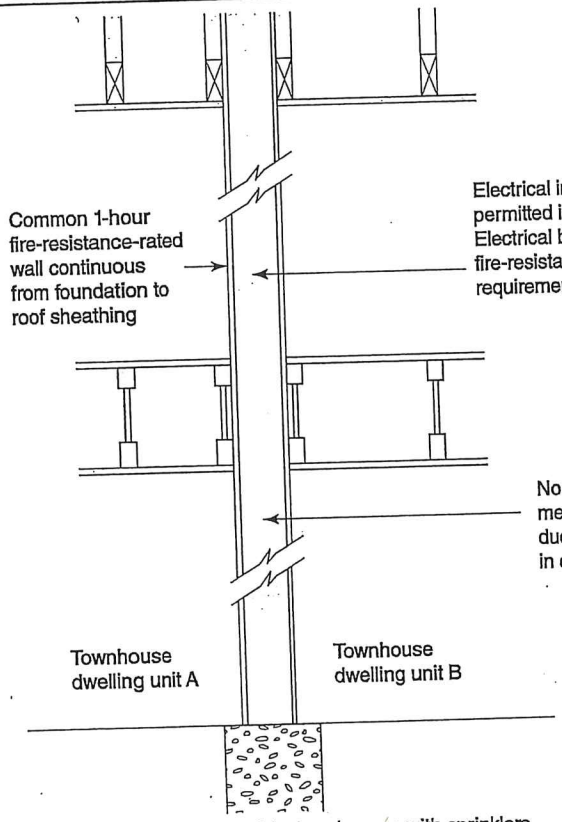

One-hour common wall for townhouses with sprinklers

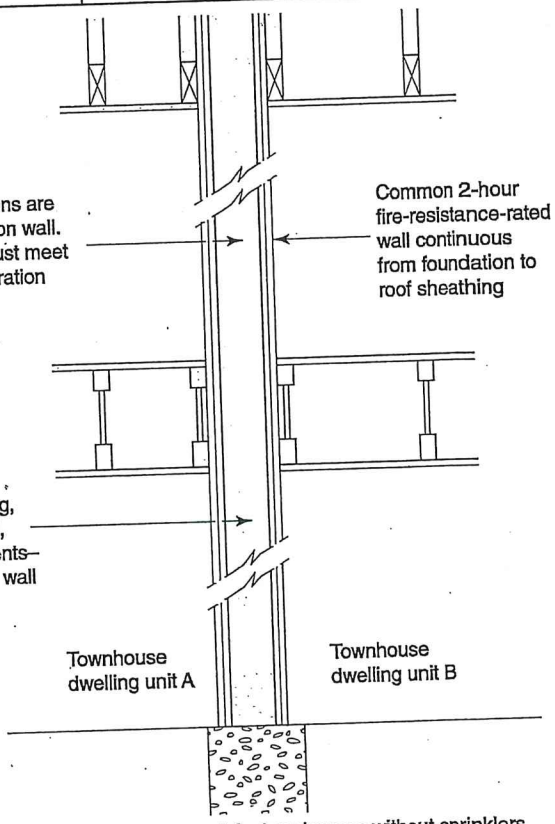

Two-hour common wall for townhouses without sprinklers

INTERNATIONAL CODE COUNCIL®
Copyright to, or licensed by, ICC (ALL RIGHTS RESERVED); accessed by Peter McLaughlin on May 27, 2015 11:08:58 PM pursuant to License Agreement. No further reproductions authorized.

Topic	2012	2015
Part 2 Building Planning (Chapter 3), Continued		
Garage Opening Protection	**R302.5.1** Doors between the garage and dwelling unit now require self-closing devices.	
Fire Protection of Floors	**R302.13 (R501.3)** With some exceptions, the code now requires 1/2-inch gypsum board or equivalent material to be applied to the underside of floor assemblies in buildings regulated by the IRC.	**R302.13** The provisions for fire protection of floors have been relocated from Chapter 5 to the fire-resistant construction provisions of Section R302. New language clarifies that the code does not regulate penetrations or openings in the fire protection membrane.

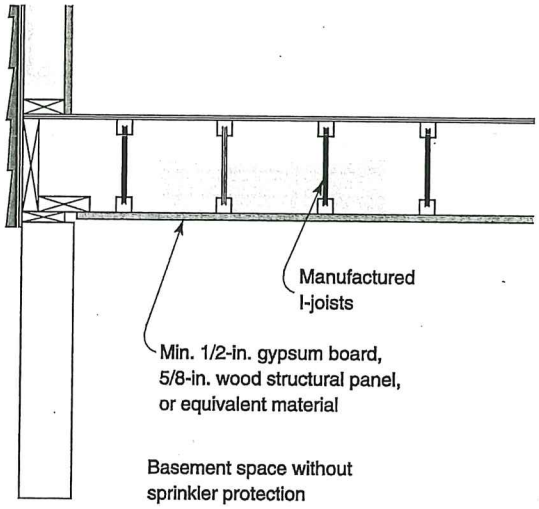

Fire protection of floors

Topic	2012	2015
Mechanical Ventilation	**R303** When used for satisfying the ventilation requirements for dwellings, mechanical ventilation must now comply with new provisions in Section M1507 for whole-house ventilation of habitable rooms and local exhaust of bathrooms. A whole-house mechanical ventilation system is now required for any dwelling that is tested with a blower door test and determined to have an air infiltration rate of less than 5 air changes per hour. Definitions for whole-house mechanical ventilation system and local exhaust have been added to Section R202.	
Ventilation Intake Openings	**R303.5** The minimum vertical clearance between a contaminant source and an outdoor air intake below has increased from 2 feet to 3 feet.	
Stairway Illumination		**R303.7, R303.8** Interior and exterior stairway illumination provisions have been placed in separate sections. Conflicting language has been removed to clarify the requirements.
Minimum Habitable Room Area		**R304.1** The requirement for one habitable room with a minimum floor area of 120sf has been removed from the code.

INTERNATIONAL CODE COUNCIL®
Copyright to, or licensed by, ICC (ALL RIGHTS RESERVED); accessed by Peter McLaughlin on May 27, 2015 11:08:58 PM pursuant to License Agreement. No further reproductions authorized.

Topic	2012	2015
Part 2 Building Planning (Chapter 3), Continued		
Ceiling Height		**R305** The minimum ceiling height for bathrooms, toilet rooms, and laundry rooms has been reduced to 6ft 8in. The exception for allowing beams, girders, ducts or other obstructions to project to with 6ft 4in of the finished floor has been expanded to include basement with habitable space.
Hazardous Locations for Glazing	**R308.4** The provisions for hazardous locations related to the installation of glazing have been reorganized for ease of use and consistent application. Each item in the numbered list of hazardous locations has been placed in a separate subsection and given a descriptive title.	
Glazing Adjacent to Doors		**R308.4.2** Glazing installed perpendicular to a door in a closed position and within 24in of the door only requires safety glazing if it is on the hinge side of an in-swinging door.
Glazing and Wet Surfaces	**R308.4.5** The separate provisions regulating glazing near tubs and swimming pools have been consolidated into one subsection titled Glazing and Wet Surfaces.	**R308.4.5** The exception from the safety glazing requirement for glazing that is 60 in. or greater from the water's edge of a bathtub, hot tub, spa, whirlpool, or swimming pool has been expanded to include glazing that is an equivalent distance from the edge of a shower, sauna, or steam room.
Glazing Adjacent Stairs and Ramps	**R308.4.6** The glazing that is not considered to be in a hazardous location, the rule for the minimum height above a tread at the side of a stairway is now 36 inches to correspond to the height of a guard as previously found in the exception. Other revisions to the test clarify the meaning and application of the glazing requirements at stairways.	
Glazing Adjacent to the Bottom Stair Landing	**R308.4.7** The provisions for glazing installed near the landing at the bottom of a stairway have been revised to clarify the application. The threshold for the minimum height above the walking surface is now 36 inches for determining that the glazing is not in a hazardous location.	**R308.4.7** Glazing adjacent to the bottom stair landing is now defined as the area in front of the plane of the bottom tread.
Garage Fire Sprinklers	**R309.5** In a subdivision where all homes are protected with dwelling fire sprinkler systems, nonrated exterior walls of garages are permitted to be constructed on a lot line when the garage is protected with a fire sprinkler system and meets the other conditions of Section R302.1.	
Emergency Escape and Rescue Openings		**R310** The emergency escape and rescue openings provisions have been reorganized. Separate provisions spell out the requirements for windows and doors used for emergency escape and rescue.

INTERNATIONAL CODE COUNCIL® Copyright to, or licensed by, ICC (ALL RIGHTS RESERVED); accessed by Peter McLaughlin on May 27, 2015 11:08:58 PM pursuant to License Agreement. No further reproductions authorized.

Topic	2012	2015
Part 2 Building Planning (Chapter 3), Continued		
Window Well Drainage	**R310.2.2** Except for locations with well-drained soils, window wells serving emergency escape and rescue openings now require a means to drain surface water to the foundation drainage system.	
Emergency Escape and Rescue Openings for Additions, Alterations and Repairs		**R310.5, R310.6** The basement of a dwelling addition does not require an emergency escape and rescue opening if there is access to a basement that does have an emergency escape and rescue opening. Remodeling of an existing basement does not trigger the emergency escape and rescue opening requirements unless a new bedroom is created.
Stair Risers		**R311.7.3, R311.7.5.1** The total vertical rise in a stairway without an intermediate landing has increased from 144in to 147 in. The provision for allowing open risers has been clarified. It is based on the distance above grade or the floor below, not on the total rise of the stair. A new exception clarifies that open risers are permitted on spiral stairways.
Landing for Stairways	**R311.7.6** For a turn in a stairway, the IRC now specifically permits angular and curved stair landing with certain dimensions less than 36 inches if the prescribed depth is provided at the walk line and minimum area criteria are satisfied. The maximum vertical rise requirement of 12 feet has been moved from the exception to a new Section R311.7.3.	
Spiral Stairways		**R311.7.10.1** The code adds a definition of spiral stairway that omits any requirement for a center post to allow for design flexibility. The code now limits the size of spiral stairways by restricting the radius at the walk line to a dimension not greater than 24 ½ ins. The method of measurement for tread depth now matches the winder provisions and measures at the intersection of the walk line and the tread nosing rather than perpendicular to the leading edge of the tread.
Alternating Tread Devices and Ship Ladders		**R311.7.11, R311.7.12** Alternating tread devices and ship ladders have been added to the stair provisions. Neither device is approved for use as a means of egress.
Ramps		**R311.8** Ramps that do not serve the required egress door are now permitted to have a slope not greater than 1 unit vertical in 8 units horizontal.
Guard Height		**R312.1.2** The provision requiring that the guard height be measured from the surface of adjacent fixed seating has been removed from the code.

INTERNATIONAL CODE COUNCIL© Copyright to, or licensed by, ICC (ALL RIGHTS RESERVED); accessed by Peter McLaughlin on May 27, 2015 11:08:58 PM pursuant to License Agreement. No further reproductions authorized.

Topic	2012	2015
Part 2 Building Planning (Chapter 3), Continued		
Window Fall Protection	**R312.2** The provisions for window fall protection have been relocated from Chapter 6 to Chapter 3. The terminology for window opening control devices has been updated for consistency with the referenced standard ASTM F 2090. Operation criteria found in the 2008 edition of the standard have been deleted from the prescriptive provisions of the IRC.	**R312.2** The window fall protection provisions have been revised to clarify the meaning, remove redundant language, and achieve consistency with the IBC provisions.
Smoke Alarms	**R314** The code now specifically recognizes wireless technology in lieu of interconnection for smoke alarm installation in both new and existing dwelling units. The interconnection provisions have been moved out of the sections related to location and power source and placed in a new section.	**R314** Battery-operated smoke alarms are permitted for satisfying the smoke alarm power requirements when alternations, repairs, and additions occur. Household fire alarm systems no longer require monitoring by an approved supervising station. New provisions address nuisance alarms related to devices installed near bathrooms and cooking appliances.
Carbon Monoxide Alarms	**R315** The code now specifically recognizes carbon monoxide detection systems with separate detectors and notification appliances installed in accordance with NFPA 720.	**R315** Carbon monoxide alarms now require connection to the house wiring system with battery backup. Exterior work such as roofing, sliding, windows, doors, and decks and porch additions no longer trigger the carbon monoxide alarm provisions for existing buildings. An attached garage is one criterion for requiring carbon monoxide alarms, but only if the garage has an opening into the dwelling. A carbon monoxide alarm is required in bedrooms when there is a fuel-fired appliance in the bedroom and adjoining bathroom. Carbon Monoxide detection systems only require detectors installed in the locations prescribed by the code and not those locations described in NFPA 720.
Thermal Barrier	**R316.4** Reference to a new standard, NFPA 275, replaces references to previous standards for determining an acceptable thermal barrier material other than 1/2–inch gypsum wallboard.	**R316.4** 23/32-inch wood structural panels satisfy the thermal barrier requirements for foam plastic insulation.
Thermal Barrier for Floors	**R316.5.13** New provisions allow the installation of structural insulated panels and other materials containing foam plastic insulation as part of a floor system without requiring a thermal barrier on the upper surface. The code requires a minimum ½-inch wood structural panel or equivalent material to protect the foam plastic insulation.	
Flood Hazards		**R322.1, R322.2** Section R322.1 is modified to emphasize that the provision applies to existing buildings in flood hazard areas where 50% or more of the structure has damage and requires restoration. Section R322.2 limits the minimum elevation allowed for dwellings in flood hazard areas and defines a Coastal A Zone.
Coastal High-Hazard Areas		**R322.3** Coastal A Zones are defined and an exception for foundation types in Coastal A Zones is added.

INTERNATIONAL CODE COUNCIL®
Copyright to, or licensed by, ICC (ALL RIGHTS RESERVED); accessed by Peter McLaughlin on May 27, 2015 11:08:58 PM pursuant to License Agreement. No further reproductions authorized.

Topic	2012	2015
Part 3 Building Construction (Chapters 4 - 10)		
Mezzanines		**R325** New provisions place limitations on the construction of mezzanines related to ceiling height and openings consistent with the IBC.
Swimming Pools, Spas and Hot Tubs		**R326** The design and construction of pools and spas shall comply with the International Swimming Pool and Spa Code (ISPSC). Appendix G, Swimming Pools, Spas and Hot Tubs, has been deleted.
Minimum Footing Size		**R403.1.1** The table for minimum footing size and thickness is divided into three expanded tables based on the type of construction being supported: light frame, light frame with veneer, and concrete or masonry. The values are also based on the type of foundations: slab on grade, crawl space, or basement.
Footing and Stem Wall Reinforcing in Seismic Design Categories D_0, D_1, and D_2		**R403.1.3** Updated figures sand code provisions in Section R403.1.3 now clearly define minimum required reinforcement in footings and stem walls located in Seismic Design Categories (SDC) D_0, D_1, and D_2
Foundation Anchorage		**R403.1.6** Anchor bolts are now required to be placed in the middle third of the sill plate.
Masonry Foundation Walls in SDC D_0, D_1, and D_2		**R404.1.4.1** Minimum vertical reinforcement in masonry stem walls has been increased from No. 3 bars to No. 4 bars spaced in maximum of 4ft on center in grouted cells.
Isolated Masonry Piers	**R404.1.9** The IRC now includes prescriptive provisions for the construction of isolated masonry pier foundations supporting raised floor systems.	
Retaining Walls		**R404.4** Retaining walls, freestanding walls not supported at the top, with more than 48ins of unbalanced backfill must be designed by an engineer. Retaining walls resisting additional lateral loads and with more than 24ins of unbalanced backfill must also be designed in accordance with accepted engineering practice.
Foundation Drainage	**R405.1** A filter membrane is now required for perforated foundation drains.	
Floor Joist Spans for Common Lumber Species		**Tables R502.3.1(1), R502.3.1(2)** Changes to Southern Pine (SP), Douglas Fir-Larch (DFL), and Hemlock Fir (HF) lumber capacities have changed the floor joist span length in the prescriptive tables of the IRC. Span lengths for Southern Pine have decreased: lengths for DFL and HF joists have increased.

INTERNATIONAL CODE COUNCIL®
Copyright to, or licensed by, ICC (ALL RIGHTS RESERVED); accessed by Peter McLaughlin on May 27, 2015 11:08:58 PM pursuant to License Agreement. No further reproductions authorized.

Topic	2012	2015
Part 3 Building Construction (Chapters 4 - 10), Continued		
Framing of Floor Openings		**R502.10** Requirements for header joist and trimmer connections in the framing of floor openings have been deleted. This section conflicted with Section R502.6, which contains minimum bearing lengths for all joists and headers.
Decks	**R507** All deck provisions have been relocated to a new section. The prescriptive provisions related to the placement of bolts and lags for deck ledger attachment to the band joist have been revised to correlate with the National Design Specifications (NDS) for Wood Construction.	
Deck Ledger Connection to Band Joist		**R507.2** The deck ledger section is reorganized to better describe the minimum requirements for connection of deck ledgers to band joists.
Alternative Deck Lateral Load Connection		**R507.2.4** When the prescriptive deck lateral load connection that has appeared in the previous editions of the code is chosen as a design option, the code now requires the two hold-down devices to be within 2 feet of the ends of the deck. A new lateral load connection option prescribes four hold-downs installed below the deck structure.
Decking		**R507.4** The code sets the maximum allowable spacing for deck joists supporting the various types of common decking materials.
Deck Joists and Beams		**R507.5, R507.6, R507.7** New sections and tables provide prescriptive methods for joists and beams in deck construction. Section R507.5 describes requirements for deck joists, Section R507.6 lists requirements for deck beams, and Section R507.7 describes minimum bearing requirements for joists and beams.

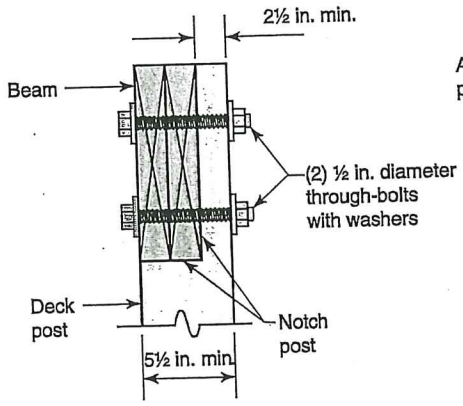

Notched post

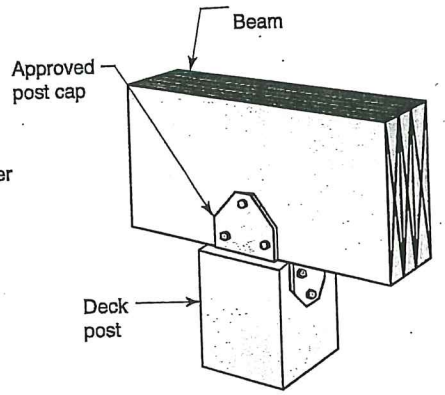

Post cap

INTERNATIONAL CODE COUNCIL®
Copyright to, or licensed by, ICC (ALL RIGHTS RESERVED); accessed by Peter McLaughlin on May 27, 2015 11:08:58 PM pursuant to License Agreement. No further reproductions authorized.

Topic	2012	2015
Part 3 Building Construction (Chapters 4 - 10), Continued		
Deck Posts		**R507.8** New Section R507.8 establishes minimum sizes of wood posts supporting wood decks and describes the requirements for connection of deck posts to the footing.
Fastener Schedule for Structural Members	**Table R602.3 (1)** Table R602.3 (1) now includes requirements for nailing roof trusses to plates, abutting studs at intersecting wall corners, and connection of rim board to sill plates.	**Table R602.3 (1)** The Fastening Schedule now contains multiple nail size options. Roof rafter connections at ridge, valley, and hip are revised. Double top plate splicing is clarified. Clarification of the joist-to-band-joist (rim board) connection is added.
Stud Size, Height, and Spacing		**R602.3.1** Table R602.3.1 is deleted and the exception for walls greater than 10ft tall is added to the text of Section R602.3.1. If studs in a tall wall meet Exception 2, they meet the requirements of the IRC and do not need engineering or use of an alternate standard.
Headers	**R602.7, Table R602.7.1** The code now includes prescriptive provisions for single member headers under limited conditions.	**R602.7, Tables R602.7(1), R602.7(2), R602.7(3), R602.7.5** The girder and header span tables of Chapter 5 have been moved to the header section in Chapter 6, Multi-ply and single header tables are combined. A new section describing rim board headers is added.
Braced Wall Lines	**R602.10.1** The section has been reorganized to address braced wall lines only, including provisions for spacing and offsets.	
Braced Wall Panels	**R602.10.2** Information on braced wall panels has been placed in one section. Braced wall panels now may be located up to 10 feet from both ends of the braced wall line. Maximum braced wall panel spacing is 20 ft measured edge to edge.	

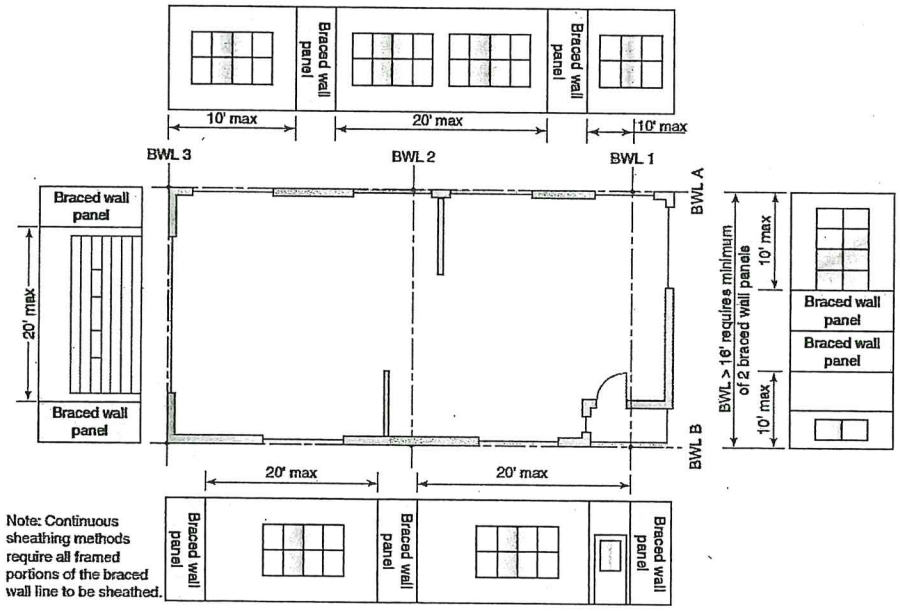

INTERNATIONAL CODE COUNCIL® Copyright to, or licensed by, ICC (ALL RIGHTS RESERVED); accessed by Peter McLaughlin on May 27, 2015 11:08:58 PM pursuant to License Agreement. No further reproductions authorized.

Topic	2012	2015
Part 3 Building Construction (Chapters 4 - 10), Continued		
Required Length of Bracing	**R602.10.3** Information on the required length of wall bracing is consolidated into one section. Wind wall bracing adjustments have been placed in a separate table from the bracing requirements based on wind speed.	**Table R602.10.3(1)** Table values for bracing requirements based on wind speed have changed slightly due to use of ultimate design wind speed values to calculate required bracing length.
Construction Methods for Braced Wall Panels	**R602.10.4** Bracing construction methods and the allowable mixing of bracing methods have been grouped into a single section. Braced wall lines that change from exterior to interior wall lines may now mix bracing methods along the braced wall line.	
Minimum Length of a Braced Wall Panel	**R602.10.5** Braced wall panel minimum lengths are combined in Table R602.10.5. Other braced wall panel length information also is placed in this section.	**Table R602.10.5** The contributing length of continuously sheathed portal frames (Method CS-PF) in low-seismic regions has increased by 50%
Construction of Methods ABW, PFH, PFG, CS-PF, and BV-WSP	**R602.10.6** This change places all of the alternate braced wall panel methods into one section and adds a new Method BV-WSP, Wall Bracing for Dwellings with Stone and Masonry Veneer in Seismic Design Categories D_0, D_1, and D_2.	**R602.10.6.2** Due to recent testing of Method PFH (Portal Frame with Hold-downs), the minimum required capacity of the hold-downs is lowered to 3500lbs in the 2015 IRC. Additionally, the new testing confirms that two sill plates are sufficient under each braced wall panel of the portal rather than the three plates used in Method PFH for the 2012 IRC.

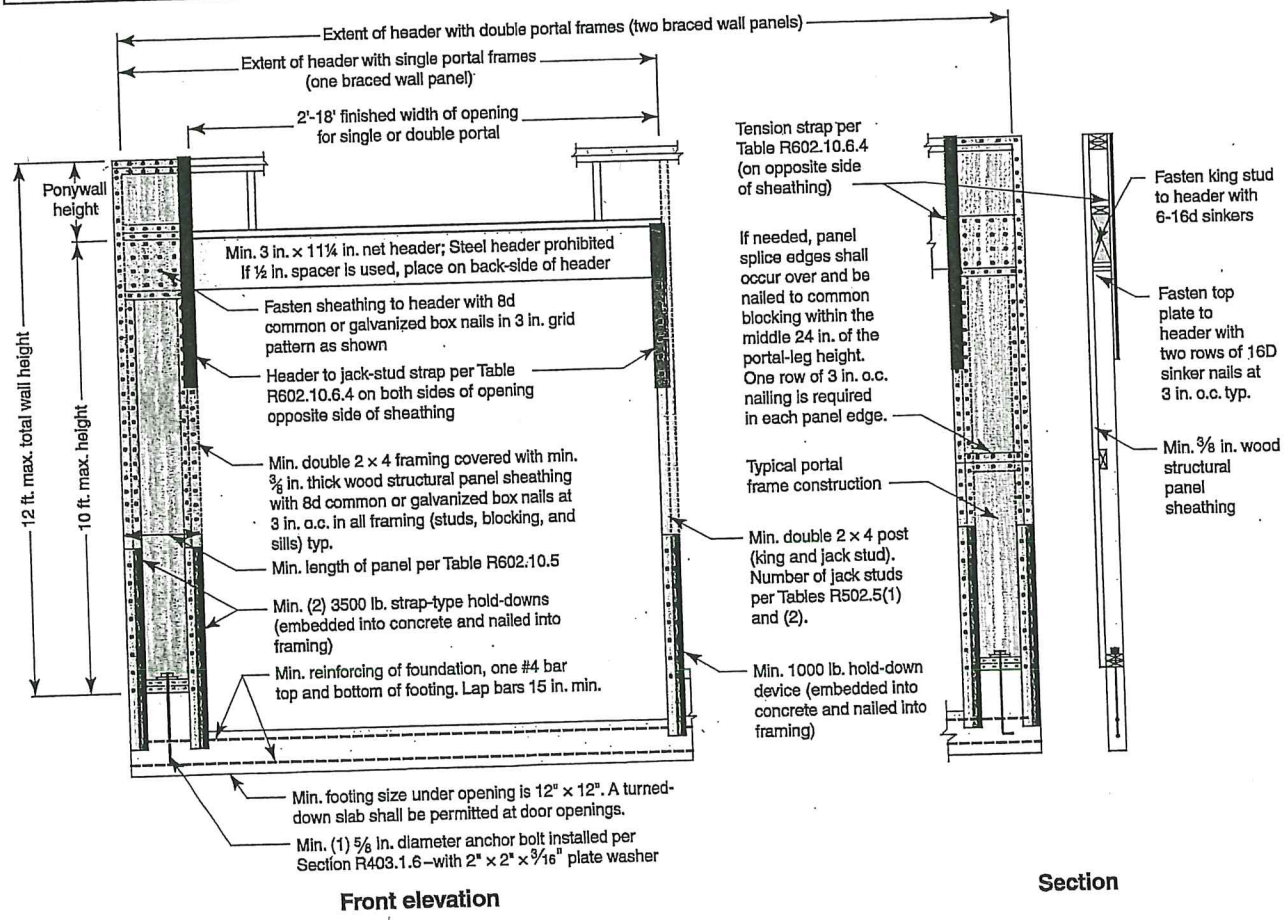

INTERNATIONAL CODE COUNCIL®
Copyright to, or licensed by, ICC (ALL RIGHTS RESERVED); accessed by Peter McLaughlin on May 27, 2015 11:08:58 PM pursuant to License Agreement. No further reproductions authorized.

Topic	2012	2015
Part 3 Building Construction (Chapters 4 - 10, Continued)		
Ends of Braced Wall Lines with Continuous Sheathing	**R602.10.7** Braced wall line end conditions for continuous sheathing have been placed in one section. A fifth end condition is defined for braced wall panel connections. When a 48-inch braced wall panel is at the end of a wall line, the code does not require a return panel or hold-down at the corner.	
Braced Wall Panel Support	**R602.10.9** Concrete stem walls 48 inches long or less and that are less than 6 inches thick require reinforcement similar to narrow masonry stem walls for supporting braced wall panels.	
Cripple Wall Bracing		**R602.10.11** A reduction is no longer required in determining the maximum distance between braced wall panels in a cripple wall. References to the bracing length adjustment tables clarify that increased bracing is required if gypsum wall finish is not applied to the cripple wall.
Simplified Wall Bracing	**R602.12** This new section offers an alternative method to braced wall lines for detached dwellings located in SDC A, B, C and townhouses in SDC A or B. The code also places limitations on wind speed, exposure category, building size and other criteria.	**R602.12** Simplified wall bracing is now allowed for one-to three-story dwellings and townhouse in Wind Exposure Category B or C with ultimate design wind speeds (*V ult)* of 130 mph or less.
Structural Sheathing over Steel Framing for Stone and Masonry Veneer		**R603.9.5** Section R603.9.5 addressing the bracing requirements for cold-formed steel framing with stone or masonry veneer has been expanded to include the higher seismic design categories. This section directs the user to increase bracing length when a structure is located in SCD C, D_0, D_1, and D_2 and has stone or masonry veneer.
Grouting Requirements for Masonry Construction		**R606.3.5** With reorganization of the masonry wall provisions in the 2015 IRC, the section covering provisions for grouting above-ground masonry walls now combines all the requirements for single, mulit-wythe, and reinforced masonry construction in one section. Clarified provisions address grout placement, cleanouts, and construction for all three types of masonry construction.
Drilling and Notching in Structural Insulated Panels		**R610.7** Drilling and notching provisions for structural insulated panels (SIP) are clarified.
Siding Material Thickness and Attachment		**R703.3** New code language clarifies limitations of use of Table R703.4 and describes fastener type, length, and penetration criteria. Table R703.4, Weather Resistant Siding Attachment and Minimum Thickness, is simplified.

INTERNATIONAL CODE COUNCIL® Copyright to, or licensed by, ICC (ALL RIGHTS RESERVED); accessed by Peter McLaughlin on May 27, 2015 11:08:58 PM pursuant to License Agreement. No further reproductions authorized.

Topic	2012	2015
Part 3 Building Construction (Chapters 4 - 10, Continued		
Wood, Hardboard, and Wood Structural Panel Siding		**R703.5** Minimum spacing based on siding thickness has been moved from 2012 IRC Table R703.4 footnote i, siding attachment and minimum thickness, to 2015 IRC Section R703.5.2, panel siding. Requirements for vertical wood siding have moved from 2012 IRC footnote j to 2015 IRC Section R703.5.1 vertical wood siding.
Wood Shakes and Shingles on Exterior Walls		**R703.6** The provisions for the application of wood shakes and shingles on exterior walls have been reorganized to give more information and for ease of use.
Masonry Veneer Lintel	**R703.7.3.2** Minimum and Maximum heights of masonry veneer are established for masonry lintels spanning not greater than 18 feet 3 inches.	
Masonry Veneer Anchorage	**R703.7.4** The fastener and air space requirements for anchored veneer have been placed in a new table for ease of use. The veneer tie spacing requirements have been modified for consistency with Building Code Requirements and Specification for Masonry Structures (TMS 402/ACI 530/ASCE 5).	
Grout Fill Behind Masonry Veneer	**R703.7.4.2** Mortar is no longer permitted to fill the air space behind anchored masonry veneer.	
Exterior Insulation and Finish Systems		**R703.9** Limitations for exterior insulation and finish systems (EIFS) with and without drainage have been added to the 2015 IRC. EIFS with drainage is required over all wall assemblies except concrete and masonry.
Vinyl Siding Attachment		**R703.11.1** This clarifies nailing penetration and spacing requirements for horizontal and vertical vinyl siding.
Adhered Masonry Veneer	**R703.12** Minimum clearance and flashing requirements have been added to apply to the base of adhered masonry veneer on exterior walls.	
Insulated Vinyl Siding and Polypropylene Siding		**R703.13, R703.14** New sections set minimum requirements for insulated vinyl siding and polypropylene siding. Polypropylene siding requires a minimum 5-ft fire separation distance and must maintain 10-ft separation from buildings on other lots.
Cladding Attachment over Foam Sheathing		**R703.15, R703.16, R703.17** Three new sections set minimum requirements for cladding attachment over foam sheathing to wood framing (R703.15), cold-formed steel framing (R703.16), and masonry or concrete walls (R703.17). For light-frame construction, prescriptive requirements are given. Connection to concrete and masonry construction continues to require engineered design in most cases when placing foam over the concrete or masonry wall.

INTERNATIONAL CODE COUNCIL®
Copyright to, or licensed by, ICC (ALL RIGHTS RESERVED); accessed by Peter McLaughlin on May 27, 2015 11:08:58 PM pursuant to License Agreement. No further reproductions authorized.

Topic	2012	2015
Part 3 Building Construction (Chapters 4 – 10), Continued		
Ceiling Joist and Rafter Span Tables		**Tables R802.4, R802.5** Changes to Southern Pine, Douglas Fir-Larch, and Hemlock Fir capacities have changed the maximum spans for lumber in the ceiling joist and rafter span tables of the IRC.
Cutting, Drilling, and Notching of Roof Members	**R802.7** Text in Section R802.7 has been deleted in favor of referencing Section R502.8.1 for provisions related to cutting, drilling, and notching of solid lumber. Provisions for notching of cantilevered rafters are placed in a new section, and the nominal dimension is replaced by the actual minimum dimension of 3 ½ inches for the remaining portion of the rafter. A new section clarifies the limits for taper cuts on the ends of ceiling joists. Two new figures aid in determine the correct application of cantilevered rafters and ceiling joist taper cut requirements.	
Roof Uplift Resistance	**802.11** The provisions for roof connections to resist wind uplift forces have been updated to current standards and simplified for ease of use. Table R802.11 has been replaced to provide accurate values for both low- and high-slope roofs in Wind Exposure Categories B and C.	
Roof Ventilation	**R806** The provisions for minimum vent area have been revised by placing two exceptions after the general rule to clarify the meaning. The exception for reducing the ventilation area when a vapor retarder is installed on the ceiling now only applies to cold-weather climates. The reduction in vent area based on cross ventilation now requires no less than 40% and no more than 50% (previously 50% and 80%) of the required ventilating area to be placed in the upper portion of the roof and no more than 3 feet below the ridge. The requirement for the upper vents to be at least 3 feet below the ridge. The requirement for the upper vents to be a least 3 feet above the eave vents has been removed.	
Unvented Attic Assemblies	**R806.5** The unvented attic provisions apply to rafter assemblies typically used for vaulted or cathedral ceilings in addition to conventional attics. References to vapor retarders now specify the applicable class as defined in Section R202. Insulation board installed as an air-impermeable barrier must have the edges sealed to provide a continuous barrier.	**Table R806.5** For unvented attics and unvented rafter spaces, Table R806.5 has a new footnote allowing calculation of insulation thickness when the insulation is placed above the structural roof sheathing.

INTERNATIONAL CODE COUNCIL® Copyright to, or licensed by, ICC (ALL RIGHTS RESERVED); accessed by Peter McLaughlin on May 27, 2015 11:08:58 PM pursuant to License Agreement. No further reproductions authorized.

Topic	2012	2015
Part 3 Building Construction (Chapters 4 – 10), Continued		
Roof Flashing Locations	**R903.2.1** The general roof flashing provisions for Chapter 9 now require a kick-out flashing where the eave of the roof intersects a wall to prevent water instruction into the wall assembly.	

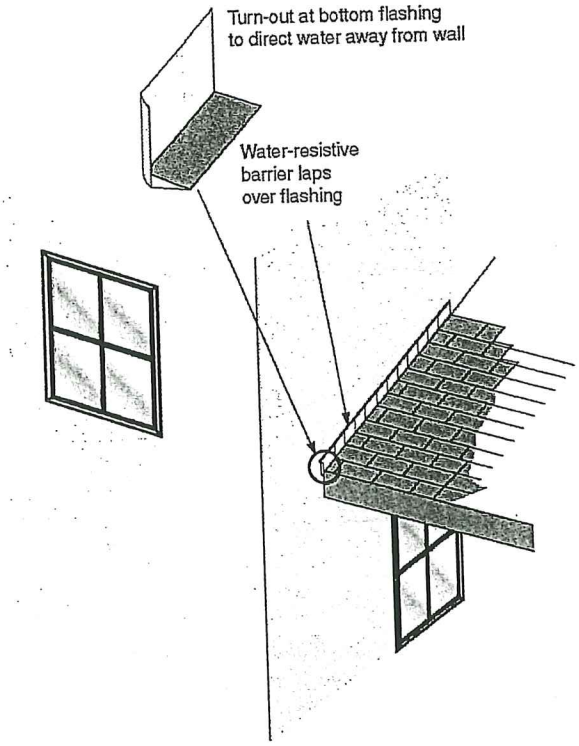

Topic	2012	2015
Crickets and Saddles	**R903.2.2** Unit skylights or roof windows must be installed in accordance with the manufacturer's installation instructions, which may not require a cricket even when they exceed 30 inches in width.	
Underlayment	**R905.2.7.2** The requirements for installation of roof covering underlayment have been added for high-wind areas. Adhered underlayment that conforms to ASTM D1970 is exempt from the fastening requirements.	**R905.1.1, R905.1.2** Roof underlayment provisions have been combined into Section R905.1.1 with three tables listing underlayment type, application, and attachment. Sections on ice barriers from the 2012 IRC are reorganized and combined into Section R905.1.2

INTERNATIONAL CODE COUNCIL®
Copyright to, or licensed by, ICC (ALL RIGHTS RESERVED); accessed by Peter McLaughlin on May 27, 2015 11:08:58 PM pursuant to License Agreement. No further reproductions authorized.

Topic	2012	2015
Part 3 Building Construction (Chapters 4 - 10), Continued		
Sidewall Flashing	**R905.2.8.3** For asphalt shingles, the IRC now recognizes both step and continuous base flashings where sloped roofs meet walls. Where the wall has anchored or adhered masonry veneer, or stucco, the provisions are clarified by referencing the applicable section of the code for counterflashing.	
Roof Drip Edge	**R905.2.8.5** A roof drip edge is now required for asphalt shingles.	
Wood Shingle Application		**R905.7.5** The minimum requirements for application of wood shingles are expanded. Fastener type is clarified and a new table lists minimum sizes for box nails. Labeling requirements for fastener packaging have also been added.
Wood Shake Installation		**R905.8.6** The minimum requirements for application of wood shakes are expanded. Fastener type is clarified, and a new table lists minimum sizes for box nails. Labeling requirements for fastener packaging have also been added.
Photovoltaic Shingles		**R905.16** Additional requirements and limits for photovoltaic shingles have been added to Section R905.16
Rooftop-Mounted Photovoltaic Systems		**907** This code provision describes the requirements and limits of rooftop-mounted photovoltaic.
Recovering versus Replacement of Roofing	**R907.3** The hail exposure map, related definitions, and the limitations on reroofing in hail zones have been deleted from the code. A new exception clarifies that the reroofing provisions do not require the removal of self-adhered ice barrier underlayment.	
Masonry Chimney Caps and Rain Caps	**R1003.9.1, R1003.3.3** New language includes provisions for commonly used masonry chimney caps and rain caps consistent with ASTM C 1283.	
Factory-Built Chimney Offsets	**R1005.7** Factory-built chimney assemblies must be installed vertically with no offsets greater than 30 degrees. No more than four elbows are permitted within the entire length of chimney assembly.	
Part 4 Energy Conservation (Chapter 11)		
Energy Efficiency	**Chapter 11** The IRC energy efficiency provisions have been replaced with the applicable residential requirements of the IECC.	
Compliance Paths		**N1101.13** The compliance paths in the energy provisions have been clarified. The mandatory provisions combined with either the prescriptive provisions or the performance provisions are deemed to comply with the code.

INTERNATIONAL CODE COUNCIL® Copyright to, or licensed by, ICC (ALL RIGHTS RESERVED); accessed by Peter McLaughlin on May 27, 2015 11:08:58 PM pursuant to License Agreement. No further reproductions authorized.

Topic	2012	2015
Part 4 Energy Conservation (Chapter 11), Continued		
Permanent Energy Certificate	**N1101.14 (N1101.16)** The permanent certificate must list the results of the blower door test for air leakage of the building envelope and the results of required duct system testing.	**N1101.14** The code now requires the permanent energy certificate to be placed on a wall in proximity to the furnace, in a utility room, or in another approved location inside the building.
R-Valve Computation-Insulated Siding		**N1102.1.3** The code now allows insulated siding to be used in the calculation for satisfying the wall insulation *R*-value. The labeled *R*-value for the siding must be reduced by R-0.6 for calculation purposes.
Access Hatches and Doors		**N1102.2.4** Vertical doors that access unconditioned attics and crawl spaces do not require an *R*-value to match the required wall insulation. Such doors must comply with the fenestration *U*-factor requirements of Table N1102.1.2.
R-Value Reduction for Walls with Partial Structural Sheathing		**N1102.2.7, Table N1102.1.2** The allowed R-value reduction for portions of walls with structural sheathing and requiring continuous insulation has been moved from footnote h of Table N1102.1.2 and placed in a new section to clarify the application.
Floor Framing Cavity Insulation		**N1102.2.8, Table N1102.4.1.1** The code now permits an air space above required insulation installed in a floor framing cavity above unconditioned space. Table N1102.4.1.1 has been reformatted into three columns to separate the air barrier requirements from the insulation requirements.
Insulation at Wall Corners and Headers		**Table N1102.4.1.1** Insulation requirements at framed wall corners and headers only apply when there is space to install insulation. The minimum insulation thermal resistance is R-3 per inch of insulation.

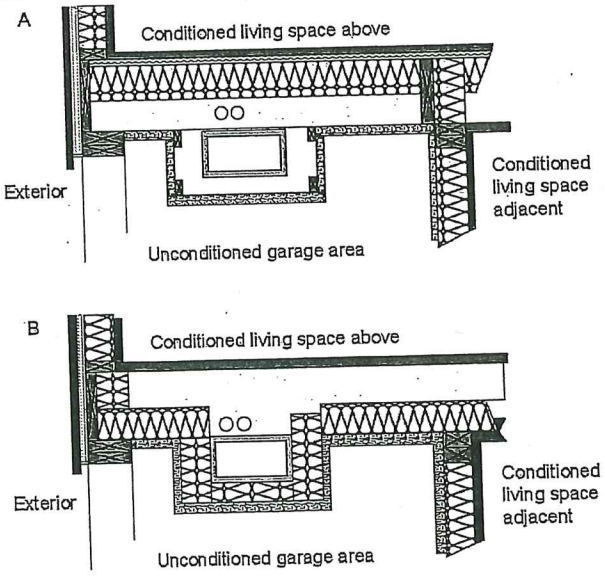

Two options for floor insulation above unconditioned space

INTERNATIONAL CODE COUNCIL®
Copyright to, or licensed by, ICC (ALL RIGHTS RESERVED); accessed by Peter McLaughlin on May 27, 2015 11:08:58 PM pursuant to License Agreement. No further reproductions authorized.

Topic	2012	2015
Part 4 Energy Conservation (Chapter 11), Continued		
Building Thermal Envelope Testing	**N1102.4.1.2** The code requires a blower door test to be performed on all dwelling units to determine compliance with the maximum air leakage rate for the applicable climate zone.	
Wood-burning Fireplace Doors		**N1102.4.2, Table N1102.4.1.1** Doors on wood-burning fireplaces must be listed for the application. The requirement for gasketed doors on fireplaces has been removed.
Duct Sealing and Testing		**N1103.3** The duct sealing and testing provisions have been reorganized to clarify the application. The maximum duct leakage rates are now prescriptive rather than mandatory provisions to accommodate design flexibility.
Building Cavities	**N1103.3.5 (N1103.2.3)** Building framing cavities are no longer permitted to be used for ducts or plenums.	
Heated Water Circulation and Temperature Maintenance Systems		**N1103.5** The code now requires automatic controls to maintain hot water temperature for heated water circulation systems and for heat trace temperature maintenance systems when such systems are installed. To save energy, continuously operating circulation pumps are no longer permitted. Heat trace systems must comply with one of the referenced standards.
Hot Water Pipe Insulation	**N1103.5.3 (N1103.4.2)** The code sets minimum insulation requirements for hot water piping.	
Lighting Equipment	**N1104.1** High-efficacy lamps are required in at least 75 percent of permanent lighting fixtures.	
Part 5 Mechanical (Chapters 12 through 23)		
Identification and Certification of Pipe, Tubing, and Fittings	**M1301** All pipe, tubing, and fittings used in mechanical systems now require a manufacturer's mark and third-party testing or certification. New definitions supplement the provisions.	
Locking Access Port Caps	**M1411.6** The code now recognizes any approved means to prevent unauthorized access to outdoor refrigerant ports.	

INTERNATIONAL CODE COUNCIL®

Copyright to, or licensed by, ICC (ALL RIGHTS RESERVED); accessed by Peter McLaughlin on May 27, 2015 11:08:58 PM pursuant to License Agreement. No further reproductions authorized.

Topic	2012	2015
Part 5 Mechanical (Chapters 12 through 23), Continued		
Dryer Exhaust Duct	**M1502.4** The maximum support spacing for dryer exhaust ducts has increased from 4 feet to 12 feet. Dryer exhaust ducts now specifically require mechanical fastening. Screw fasteners are permitted to penetrate the exhaust duct no more than 1/8 inch. The maximum specified length of dryer exhaust duct has been increased from 25 to 35 feet and now matches the corresponding dryer exhaust provisions of the IMC, IFGC, and the IRC fuel-gas provisions.	
Dryer Exhaust Duct Power Ventilators		**M1502.4.4, M1502.4.5** The code now recognizes the use of dryer exhaust duct power ventilators (DEDPVs) to increase the allowable exhaust duct length for clothes dryers.
Dryer Duct Length Identification		**M1502.4.6** A permanent label identifying the concealed length of the dryer exhaust duct is no longer required where the equivalent duct length does not exceed 35ft. For the dryer exhaust duct exceeding 35ft, a label or tag is required whether the duct is concealed or not.

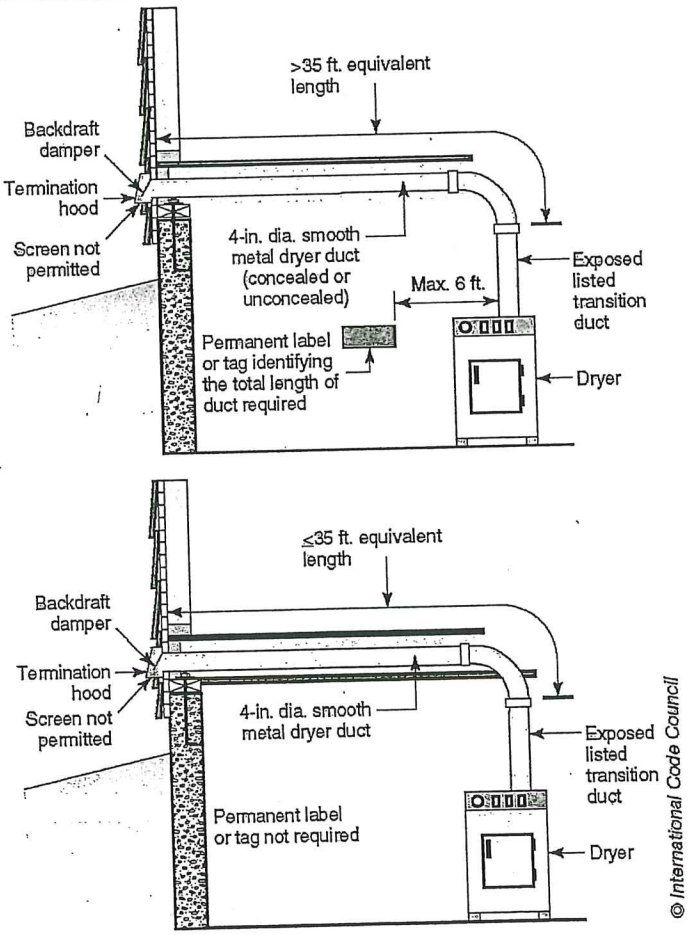

A permanent label or tag is only required when the equivalent length of the dryer exhaust duct exceeds 35 feet.

INTERNATIONAL CODE COUNCIL®
Copyright to, or licensed by, ICC (ALL RIGHTS RESERVED); accessed by Peter McLaughlin on May 27, 2015 11:08:58 PM pursuant to License Agreement. No further reproductions authorized.

Topic	2012	2015
Part 5 Mechanical (Chapters 12 through 23), Continued		
Makeup Air for Range Hoods		**M1503.4** Automatic operation of a mechanical damper is no longer required for supplying makeup air for kitchen exhaust systems exceeding a rating of 400 cubic feet per minute (cfm). Transfer openings are permitted to obtain makeup air from rooms other than the kitchen.
Exhaust Openings	**M1506** A minimum clearance of 3 ft is required between air exhaust terminations and openings into the building.	

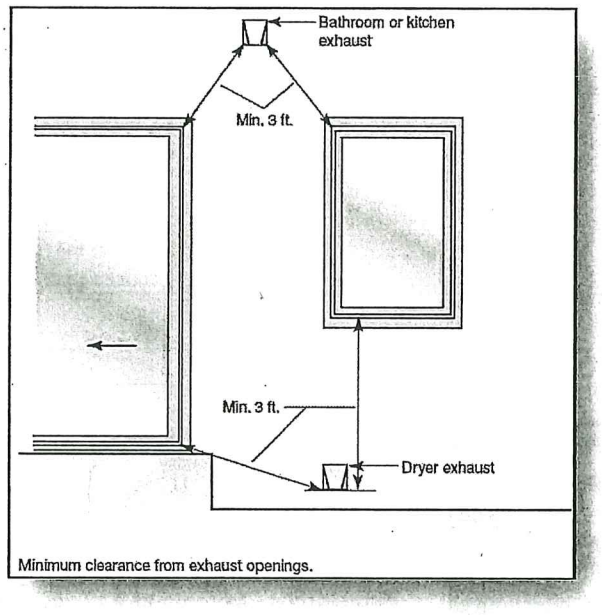

Minimum clearance from exhaust openings.

Topic	2012	2015
Exhaust Duct Length		**M1506.2** The code establishes maximum exhaust duct lengths based on duct diameter, type of duct and the exhaust fan airflow rating.
Mechanical Ventilation	**M1507** Prescriptive design criteria for whole-house ventilation systems have been added to the mechanical ventilation provisions. Mechanical ventilation of kitchens and bathrooms is now described as local exhaust. New definitions for whole-house ventilation and local exhaust have been added to Section R202.	
Above-Ground Duct Systems	**M1601.1** Stud cavities of exterior walls are no longer permitted to be used for return air plenums.	
Above-Ground Duct Systems		**M1601.1.1, Table M1601.1.1, M1601.2** The list of duct system requirements has been revised to reference the applicable standards and delete redundant language. The table for material thickness of metal ducts was replaced with what is

INTERNATIONAL CODE COUNCIL®
Copyright to, or licensed by, ICC (ALL RIGHTS RESERVED); accessed by Peter McLaughlin on May 27, 2015 11:08:58 PM pursuant to License Agreement. No further reproductions authorized.

Topic	2012	2015
		currently consistent with the SMACNA sheet metal construction standard.
Part 5 Mechanical (Chapters 12 through 23), Continued		
Duct Installation		**M1601.4** Tapes and mastics used to seal sheet metal ducts must be listed to UL 181 B as has been required for sealing flexible ducts. Snap-lock and button-lock seams are no longer exempt from the sealing requirements.
Duct Joints, Seams and Connections	**M1601.4.1** The IRC provisions for duct connections have been replaced with language from the IMC and now reference the SMACNA HVAC Duct Construction Standards. Unlisted duct tape is not permitted for sealing joints or seams of ductwork.	
Return Air		**M1602** The provisions for return air have been simplified and clarified to improve understanding while preserving the intent of keeping contaminants out of the airstream of the heating, ventilation and air-conditioning (HVAC) system. The provisions for outdoor air openings have been removed and the code now references the applicable provisions for outdoor air in Chapter 3.
Prohibited Sources of Outdoor and Return Air	**M1602.2** The prohibition on taking return air from a garage does not apply to an HVAC system that serves the garage only. Mechanical rooms are no longer listed as prohibited sources of return air. Modifications of the 10-foot rule for separation of return air inlets and fuel-burning appliances clarifies that the requirement applies to the draft hood and open combustion chamber of atmospheric burner appliances, not direct vent appliances with sealed combustion chambers.	
Ranges and Ovens	**M1901** The provisions for kitchen ranges have been updated to match those for gas-fired ranges in Section G2447. References in Sections M1504.1 and M1505.1 alert the code user to specific provisions related to installation of cooking appliances above ranges and clearances for open-top broiler units. Mandatory code language now clarifies that cooking appliances used in swellings must be listed and labeled for household use. Commercial cooking appliances are not permitted in dwelling units.	

INTERNATIONAL CODE COUNCIL®
Copyright to, or licensed by, ICC (ALL RIGHTS RESERVED); accessed by Peter McLaughlin on May 27, 2015 11:08:58 PM pursuant to License Agreement. No further reproductions authorized.

Topic	2012	2015
Part 6 Fuel Gas (Chapter 24)		
Condensate Pumps		**G2404.11** Condensate pumps located in uninhabitable spaces must be connected to the appliance to shut down the equipment in the event of pump failure.
Reduced Clearance to Combustible Materials	**G2409.1** Gypsum board is now specifically identified as a combustible material for purposes of determining required clearances around gas-fired appliances.	
Electrical Bonding of Corrugated Stainless Steel Tubing		**G2411.1.1** The maximum allowable length of the bonding jumper for corrugated stainless steel tubing (CSST) is 75ft. Bonding methods must comply with NFPA 70 and devices, such as clamps, must be listed in accordance with UL 467.
Pipe Identification and Certification	**G2412, G2415** All pipe, tubing, and fittings used in a fuel-gas system now require a manufacture's mark and third-party testing or certification. New definitions supplement the provisions.	
Maximum Gas Demand		**G2413.2** Table G2413.2 and the reference to it were deleted to clarify that the code requires the actual maximum input rating of the appliances to be known and used for gas pipe sizing purposes.
Plastic Pipe, Tubing and Fitting		**G2414.6** PVC and CPVC pipe are expressly prohibited materials for supplying fuel gas.
Fittings in Concealed Locations		**G2415.5** This section retains the basic intent while being completely reorganized to clarify the correct application. Threaded elbows, tees and coupling are now specifically approved for concealed locations as the code always intended. The code now provides the applicable referenced standards for fittings that are listed for concealed locations.
Protection of Concealed Piping Against Physical Damage		**G2415.7** The section on protection of piping has been completely rewritten to address more than just bored holes and notches in structural members. It now addresses piping parallel to framing members and piping within framing members. The new text requires that the protection extend well beyond the edge of members that are bored or notched.
Sediment Trap	**G2419.4** A new figure illustrates the correct configuration of a sediment trap. Gas-fired decorative vented appliances installed in vented fireplaces and gas fireplaces are not required to be equipped with a sediment trap.	
Medium-Pressure Regulators		**G2421.2** Medium-Pressure (MP) line regulators installed in rigid piping must have a union installed to allow removal of the regulator.

INTERNATIONAL CODE COUNCIL®
Copyright to, or licensed by, ICC (ALL RIGHTS RESERVED); accessed by Peter McLaughlin on May 27, 2015 11:08:58 PM pursuant to License Agreement. No further reproductions authorized.

Topic	2012	2015
Part 6 Fuel Gas (Chapter 24), Continued		
Connecting Portable and Movable Appliances		**G2422.1** Where portable gas appliances are used outdoors, such as gas grills, fire pits, and patio heaters, the options for connecting to the gas distribution system are practically limited to gas hoses designed for the purpose. Such hoses must comply with ANSI Z21.54.
Door Clearance to Vent Terminals		**G2426.7.1** An appliance vent terminal is not permitted in a location with 12 inches of the arc of a swinging door.

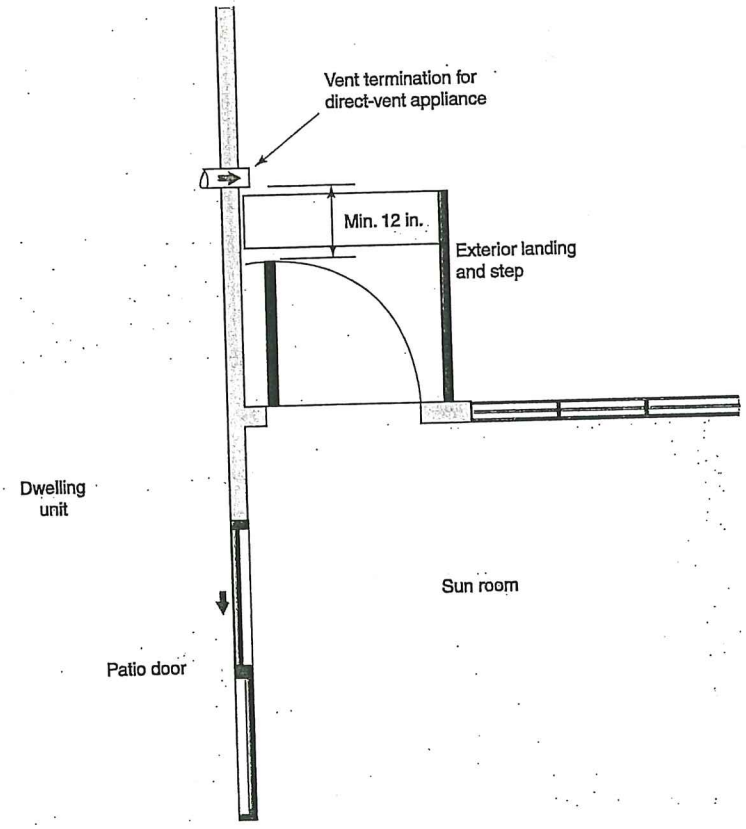

INTERNATIONAL CODE COUNCIL®
Copyright to, or licensed by, ICC (ALL RIGHTS RESERVED); accessed by Peter McLaughlin on May 27, 2015 11:08:58 PM pursuant to License Agreement. No further reproductions authorized.

Topic	2012	2015
Part 6 Fuel Gas (Chapter 24), Continued		
Plastic Piping for Appliance Vents		**G2427.4.1, G2427.6.8.3** The approval of plastic pipe for venting appliances is no longer a responsibility of the building official and, instead that responsibility rests with the appliance manufacturer and the appliance listing agency. The code previously addressed only vents, which are defined as listed and labeled factory-made products. The code is no longer silent on the sizing of plastic pipe vents that do not fall under the definition of "vent".
Venting System Termination Location		**G2427.8** New text addresses the location of sidewall vent terminals with respect to adjoining buildings. A 10-foot separation is required when a vent discharges in the direction of an opening in an adjacent building.
Clothes Dryer Exhaust Ducts		**G2439.4, G2439.7** New text recognizes the use of dryer exhaust duct power ventilators (DEDPVs) to increase the allowable exhaust duct length for clothes dryers. A permanent label identifying the concealed length of dryer exhaust duct is no longer required where the equivalent duct length does not exceed 35ft. For dryer exhaust duct exceeding 35ft, a label or tag is required whether the duct is concealed or not. Instead of prohibiting all duct fasteners such as screws and rivets, the code now limits the penetration of fasteners, where installed.

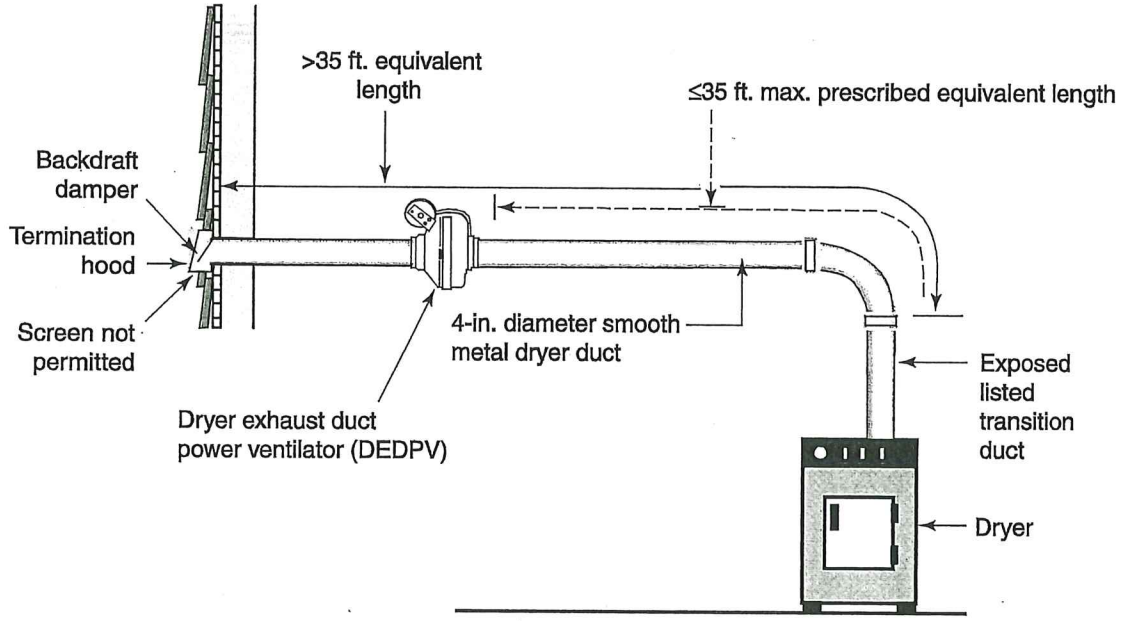

INTERNATIONAL CODE COUNCIL®
Copyright to, or licensed by, ICC (ALL RIGHTS RESERVED); accessed by Peter McLaughlin on May 27, 2015 11:08:58 PM pursuant to License Agreement. No further reproductions authorized.

Topic	2012	2015
Part 6 Fuel Gas (Chapter 24), Continued		
Prohibited Sources of Outdoor and Return Air	**G2442.4** For an HVAC system that services the garage only, return air is permitted to be taken from the garage. The requirement for a 10-foot separation between return air inlets and fuel-burning appliances applies only to the draft hood and open combustion chamber of atmospheric burner appliances, not direct vent appliances with sealed combustion chambers.	
Prohibited Location of Commercial Cooking Appliances		**2447.2** The code does not prohibit the installation of cooking appliances that are listed as both commercial and domestic appliances.
Part 7 Plumbing (Chapter 25 through 33)		
Inspection and Tests for Building Sewer		**P2502.1, P2503.4** New text clarifies the method for examining existing building sewers and building drains when the entire sanitary drainage system is replaced. Internal examination is required to verify the size, slope, and condition of the existing piping. A new provision prescribes a pressure test for a forced sewer at a test pressure of 5psi (34.5 kPa) greater than the pump rating.
Drain, Waste, and Vent Systems Testing		**P2503.5** The head pressure for a water test on drain, waste, and vent (DWV) systems has been reduced from 10ft to 5ft.
Rough Plumbing Test	**P2503.5.1** The IRC no longer permits air testing of plastic piping in DWV systems.	
Connections to Drainage Systems	**P2601.2** Waste water from lavatories, bathtubs, showers, clothes washers, and laundry trays I now defined as gray water and is permitted to be discharged to an approved gray-water system.	

INTERNATIONAL CODE COUNCIL®
Copyright to, or licensed by, ICC (ALL RIGHTS RESERVED); accessed by Peter McLaughlin on May 27, 2015 11:08:58 PM pursuant to License Agreement. No further reproductions authorized.

Topic	2012	2015
Part 7 Plumbing (Chapter 25 through 33), Continued		
Protection Against Physical Damage		**P2603.2.1** For piping installed through bored holes or in notches, the minimum clearance distance from the concealed piping to the edge of the framing member has been reduced from 1 ½ in to 1 ¼ in. Protection is required for piping installed less than 1 ¼ in from the edge of the framing member.

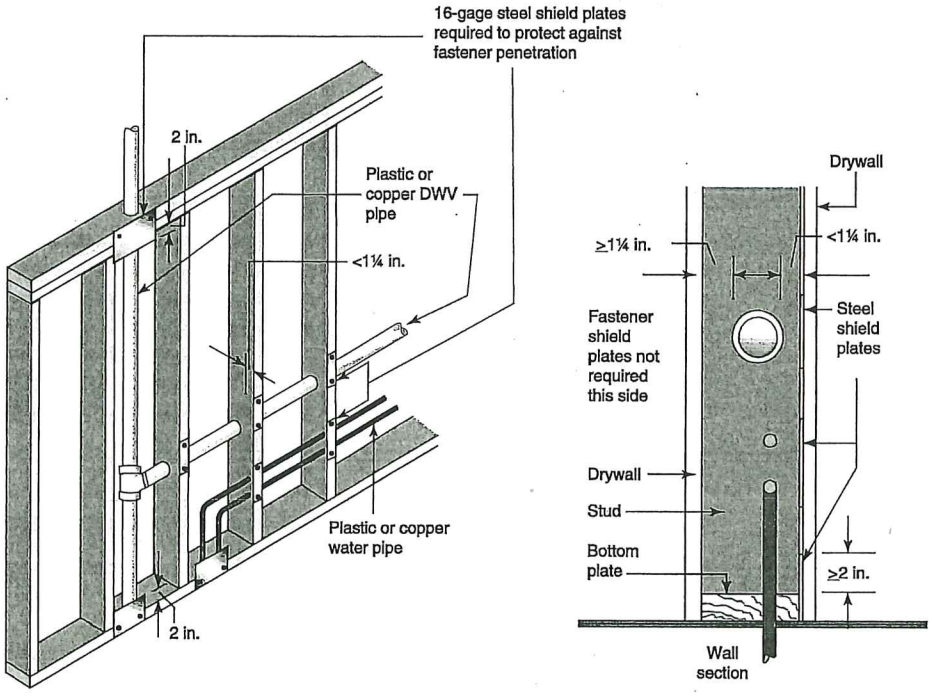

Topic	2012	2015
Protection Against Corrosion		**P2603.3** The minimum thickness of sheathing material for protection of piping against corrosion has been reduced from 0.025 in to 0.008 in (8mil). The corrosion protection requirement applies to metallic piping other than cast iron, ductile iron, and galvanized steel that is in direct contact with concrete, masonry or steel framing. Previously, protection was only required for materials passing through walls and floors of these materials. All metallic piping requires corrosion protection when located in corrosive soils.
Pipes through Foundation Walls	**P2603.4** A sleeve or relieving arch is not required for pipes passing under a footing.	
Piping Support		**Table P2605.1** Support spacing requirements for PEX and PE-RT tubing 1 ¼ in and greater in diameter have been added to the table. Footnote b of Table P2605.1 clarifies the mid-story guide requirements for some types of vertical pipe 2 ins and smaller in diameter.

INTERNATIONAL CODE COUNCIL®
Copyright to, or licensed by, ICC (ALL RIGHTS RESERVED); accessed by Peter McLaughlin on May 27, 2015 11:08:58 PM pursuant to License Agreement. No further reproductions authorized.

Topic	2012	2015
Part 7 Plumbing (Chapter 25 through 33), Continued		
Sealing of Annular Spaces	**P2606** Provisions for sealing pipe penetrations of the building envelope have been placed in a new section and revised to more precisely prescribe the approved types of materials and their correct application. The new language also correlates with the provisions for sealing against air leakage in the IECC.	
Identification and Certification	**P2609.1, 2609.4** Pipe, fittings, and plumbing components are required to meet the marking requirements of the applicable referenced standard in addition to bearing the identification of the manufacturer. The code now requires all plumbing products and materials to be listed by a third-party certification agency. Table P2608.4 and third-party testing requirements have been deleted.	
Plumbing Fixtures, Waste Receptors	**P2702.1, P2706.1** The definition of plumbing fixture has been revised to include receptacles and devices that discharge to the drainage system but are not connected to a water supply, such as a floor drains and standpipes. The requirement for strainers on plumbing fixture outlets has been clarified by specifically excluding hub drains and standpipes. Attics and crawlspaces are now listed as prohibited locations for waste receptors and standpipes. Clothes-washer standpipes are permitted to be installed in bathrooms.	**P2702.1, P2706.1** A definition of waste receptor has been added to the code. Waste receptors are now permitted in bathrooms and closets.
Shower Receptors and Lining	**P2709.1, P2709.2** The distance shower liners must extend above finished thresholds has been reduced from 3 inches to 2 inches. Minimum thickness requirements for PVC and CPE shower liners have been deleted in favor of requirements in referenced standards.	
Dishwashing Machines		**P2717** The code now references the applicable standards for integral air gaps protecting the potable water supply to dishwashers. The term "food waste disposer" replaces "food waste grinder." Section P2717.2 and P2717.3 regarding dishwasher discharge to the sink tailpiece or the food waste disposer have been combined into a single Section P2717.2, eliminating redundant language and improving understanding of the provisions.

INTERNATIONAL CODE COUNCIL®
Copyright to, or licensed by, ICC (ALL RIGHTS RESERVED); accessed by Peter McLaughlin on May 27, 2015 11:08:58 PM pursuant to License Agreement. No further reproductions authorized.

Topic	2012	2015
Part 7 Plumbing (Chapter 25 through 33), Continued		
Water Heater Drain Valves and Pans	**P2801.5** The provisions for safety pans under water heaters have been clarified by prescribing such protection for water heaters with storage tanks only. Tankless water heaters do not require pans.	**P2801** The code now specifically requires drain valves with a threaded outlet for water heaters. The water heater pan requirements have been expanded to accept aluminum and plastic pans of the prescribed thickness. The code clarifies that a pan drain is not required when a water heater is replaced and there is no existing drain.

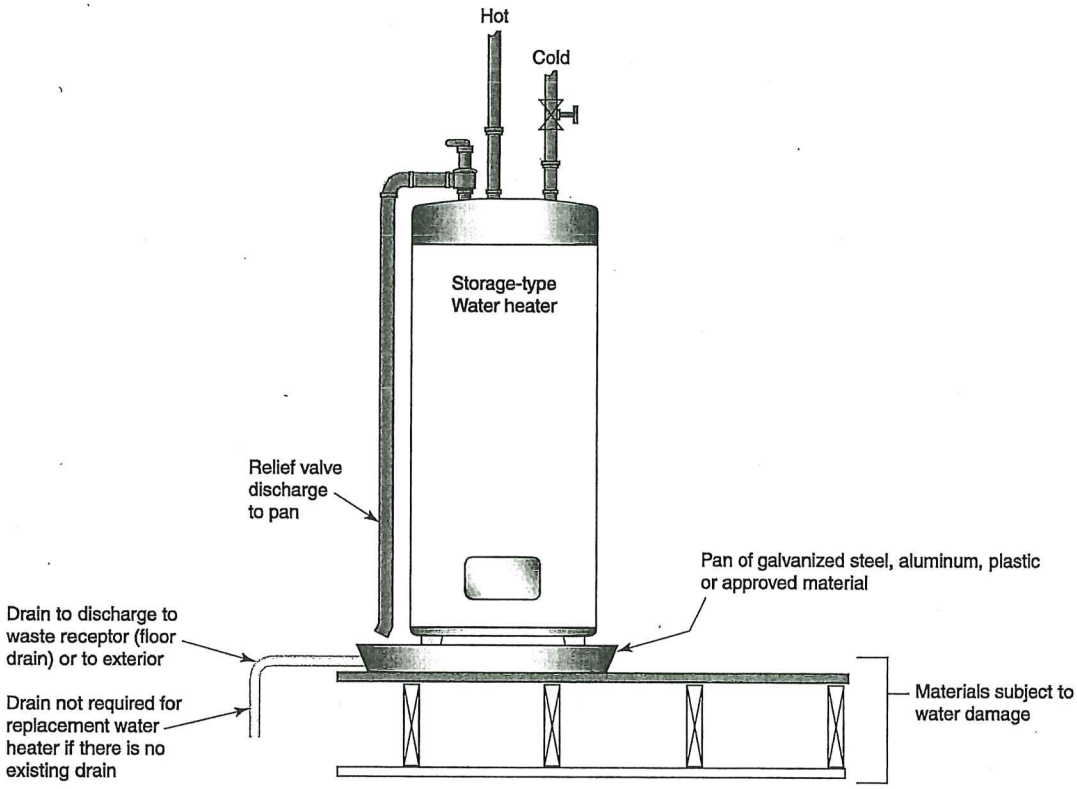

Topic	2012	2015
Water Heater Relief Valve Discharge Piping		**P2804.6.1** The temperature and pressure (T&P) relief valve discharge pipe termination must have an air gap suitable to protect the potable water supply distribution system of the building. PEX and PE-RT tubing used for relief valve discharge piping must be one size larger than the T&P valve discharge outlet, and the outlet end of the tubing must be fastened in place.

INTERNATIONAL CODE COUNCIL®
Copyright to, or licensed by, ICC (ALL RIGHTS RESERVED); accessed by Peter McLaughlin on May 27, 2015 11:08:58 PM pursuant to License Agreement. No further reproductions authorized.

Topic	2012	2015
Part 7 Plumbing (Chapter 25 through 33), Continued		
Nonpotable Water Systems		**P2901, P2910 through P2913** Nonpotable water outlets, such as hose connections, that utilize nonpotable water must be identified with a warning and a symbol that nonpotable water is being used. The color purple is established for identifying distribution piping conveying nonpotable water. New Sections P2910 through P2913 are extracted from the IgCC and intend to provide guidance on the collection, storage, and distribution of various types of nonpotable water for residential buildings.
Minimum Fire Sprinkler Separation from Obstructions	**P2904.2.4.2** A new figure provides prescriptive values for minimum separation distances between fire sprinklers and obstructions. Lesser distances are permitted in accordance with the manufacturer's installation instructions.	
Heated Water Distribution Systems		**P2905** Pointers have been added to the IRC plumbing provisions to direct the user to the applicable energy conservation provisions of IRC Chapter 11 related to heated water distribution systems. Section N1103.5 requires automatic controls to maintain hot water temperature for heated water circulation systems and for heat trace temperature maintenance systems when such systems are installed.
Lead Content of Drinking Water Pipe and Fittings		**P2906.2** The code has a more stringent limitation for lead content in pipe, pipe fittings, joints, valves, faucets, and fixture fittings that convey water used for drinking and cooking.
Solvent Cementing of PVC Joints		**P3003.9** The application of a primer to drain, waste, and vent PVC pipe and fittings prior to solvent cementing is not required for 4-inch pipe size and smaller, provided that the piping is for a non-pressure application.
Joints between Drainage Piping and Water Closets	**P3003.19** Use of waste connector and sealing gasket is now permitted as an alternative to a flanged connection for floor-mounted water closets.	
Cleanouts		**P3005.2** The section on cleanouts has been completely reorganized and reworded for clarity. Brass cleanout plugs are only permitted for metallic piping. Where located at a finished wall, the cleanout must be within 1 ½ in of the finished surface. A cleanout is no longer required at the base of each waste or soil stack.

INTERNATIONAL CODE COUNCIL®
Copyright to, or licensed by, ICC (ALL RIGHTS RESERVED); accessed by Peter McLaughlin on May 27, 2015 11:08:58 PM pursuant to License Agreement. No further reproductions authorized.

Topic	2012	2015
Part 7 Plumbing (Chapter 25 through 33), Continued		
Ejector Connection to the Drainage System	**P3007.3.5** The discharge from ejector pumps is now permitted to connect to soil stacks, waste stacks, and horizontal branch drains in addition to building sewers and building drains.	
Backwater Valves		**P3008.1** For existing buildings, fixtures that are located above the next upstream manhole cover are allowed to discharge through a backwater valve.
Vent Terminals		**P3103.1, P3103.2** Where a minimum 3-inch diameter vent terminal is required to prevent frost blockage in cold climates, the 3-inch diameter pipe must extend at least 12 in inside the building's thermal envelope. The minimum 7-foot height requirement for vent terminations applies only to roofs used for purposes similar to residential decks, patios and balconies.
Location of Vent Terminal	**P3103.5** The minimum clearance to vent terminations above openings within 10 feet has been increased from 2 feet to 3 feet.	
Trap Seal Protection Against Evaporation		**P3201.2** Trap seal protection against evaporation can now be accomplished in a variety of ways, including trap seal primer valves supplied with nonpotable water and barrier-type trap seal protection devices
Part 8 Electrical (Chapters 34 through 43)		
Concrete-Encased Electrodes	**E3608.1.2** The provisions for concrete-encased electrodes have been broken into separate parts to clarify the meaning and application.	
Supplemental Electrode Required	**E3608.4** A rod, pipe, or plate electrode requires a supplemental electrode unless testing confirms that the single electrode has a resistance to earth of 25 ohms or less.	

INTERNATIONAL CODE COUNCIL®
Copyright to, or licensed by, ICC (ALL RIGHTS RESERVED); accessed by Peter McLaughlin on May 27, 2015 11:08:58 PM pursuant to License Agreement. No further reproductions authorized.

Topic	2012	2015
Part 8 Electrical (Chapters 34 through 43), Continued		
Outdoor Outlets	E3901.7 An outdoor outlet is now required for any size of deck, porch, or balcony that is accessible from inside the swelling unit.	

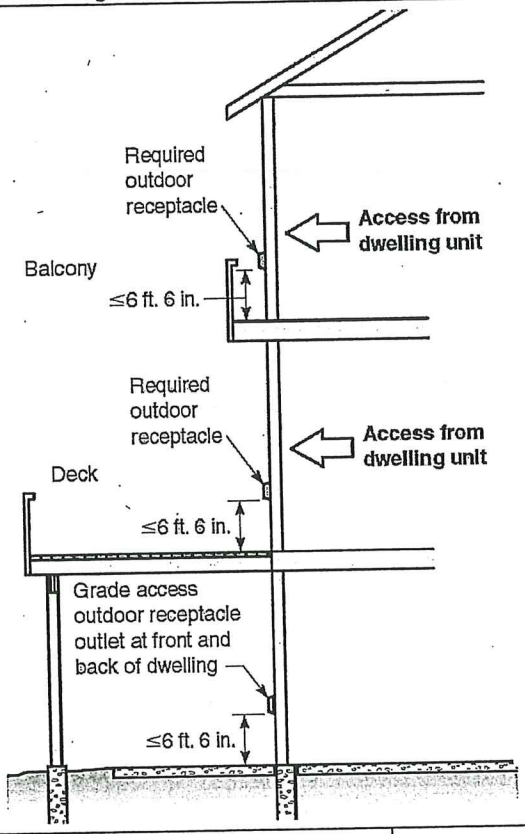

Topic	2012	2015
Receptacle Outlets for Garages		E3901.9 Garage receptacle outlets must be served by a separate branch circuit that does not supply other outlets. At least one receptacle outlet is required for each car space in a garage.

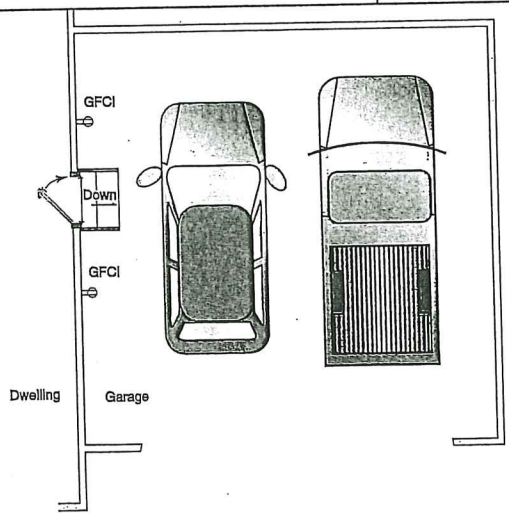

INTERNATIONAL CODE COUNCIL®
Copyright to, or licensed by, ICC (ALL RIGHTS RESERVED); accessed by Peter McLaughlin on May 27, 2015 11:08:58 PM pursuant to License Agreement. No further reproductions authorized.

Topic	2012	2015
Part 8 Electrical (Chapters 34 through 43), Continued		
Receptacle Outlets in Foyers	**E3901.11** When exceeding 60 square feet in area, foyers in dwelling units now require receptacle outlets.	
Ground-Fault Circuit Interrupter Protection		**E3902.8, E3902.9, E3902.10** Laundry areas have been added to the list of locations requiring ground-fault circuit interrupter (GFCI) protection. Receptacles within 6 feet of bathtubs and showers, and receptacles for dishwashers also require CFGI protection.
Location of Ground-Fault Circuit Interrupters	**E3902.11** When provided, ground-fault circuit interrupter devices must be placed in a readily accessible location.	
Boxes at Fan Outlets	**E3905.8** When a ceiling outlet box is wired for a future ceiling fan, the box must be listed for the support of a ceiling fan.	
Switching Controlling Lighting Loads	**E4001.15** Unless a means of access for rewiring is provided, a grounded circuit conductor must be provided at the switch outlet.	
Tamper-Resistant Receptacles	**E4002.14** Receptacles that are located more than 5-1/2 feet above the floor, are part of a luminaire or appliance, or in a dedicated space for an appliance are no longer required to be tamper-resistant.	
Location of Low-Voltage Luminaires Adjacent to Swimming Pools		**E4203.4.3** Listed low-voltage luminaires meeting the prescribed conditions are permitted to be located less than 5 feet from the water's edge of swimming pools, spas, and hot tubs.
Bonded Parts of Pools, Spas, and Hut Tubs	**E4204.2** Where walls are at least 5 feet high and less than 3 feet from the edge of the pool, equipotential bonding is required on the pool side of the wall only. Metal parts, including awnings, fences, and door and window frames constructed of metal, require bonding if located within 5 feet of the edge of the pool.	
Accessibility to Electrical Equipment of Hydromassage Bathtubs	**E4209.3** When located behind access panels and serving hydromassage bathtubs, receptacle outlets must have their face in direct view and within 1 foot of the access opening.	

INTERNATIONAL CODE COUNCIL®
Copyright to, or licensed by, ICC (ALL RIGHTS RESERVED); accessed by Peter McLaughlin on May 27, 2015 11:08:58 PM pursuant to License Agreement. No further reproductions authorized.

2015 International Residential Code –Transition from the 2009 IRC

Topic	2012	2015
Part 9 Appendices		
Light Straw-Clay Construction		**Appendix R** Prescriptive requirements for light straw-clay construction have been added as an appendix to the 2015 IRC. Light straw-clay walls are non-bearing infill around a structural frame.
Strawbale Construction		**Appendix S** Prescriptive requirements for strawbale construction have been added as an appendix to the 2015 IRC. Strawbale walls may be non-bearing infill around a structural frame or bearing walls depending upon the method of construction and detailing. Appendix S contains requirements for both construction methods.

INTERNATIONAL CODE COUNCIL®
Copyright to, or licensed by, ICC (ALL RIGHTS RESERVED); accessed by Peter McLaughlin on May 27, 2015 11:08:58 PM pursuant to License Agreement. No further reproductions authorized.

Notes

INTERNATIONAL CODE COUNCIL®

Copyright to, or licensed by, ICC (ALL RIGHTS RESERVED); accessed by Peter McLaughlin on May 27, 2015 11:08:58 PM pursuant to License Agreement. No further reproductions authorized.

Notes

INTERNATIONAL CODE COUNCIL® Copyright to, or licensed by, ICC (ALL RIGHTS RESERVED); accessed by Peter McLaughlin on May 27, 2015 11:08:58 PM pursuant to License

Notes

INTERNATIONAL CODE COUNCIL®

Copyright to, or licensed by, ICC (ALL RIGHTS RESERVED); accessed by Peter McLaughlin on May 27, 2015 11:08:58 PM pursuant to License Agreement. No further reproductions authorized.