TOWN OF BROOKLINE

CYPRESS STREET PLAYGROUND

BROOKLINE PROJECT # PW-20-15

TOWN OF BROOKLINE, MASSACHUSETTS

BROOKLINE PARKS AND OPEN SPACE
BROOKLINE TOWN HALL
333 WASHINGTON STREET
BROOKLINE, MA 02445
(617) 730-2088

LANDSCAPE ARCHITECT / ENGINEER:
WESTON & SAMPSON

Weston & Sampson design studio

85 DEVONSHIRE STREET, 3RD FLOOR
BOSTON, MA 02109
(617) 412-4480

IRRIGATION:

Irrigation Consulting, Inc.

20 MERRIT PARKWAY
NASHUA, NH 03062
irrigationconsulting.com
978.433.8972

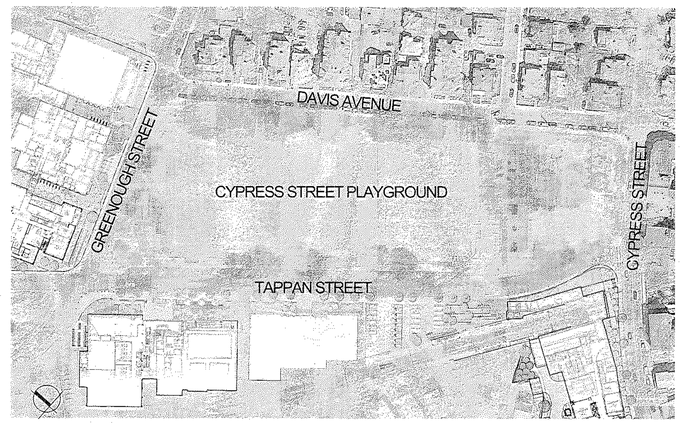

- RENDERING FOR ILLUSTRATIVE PURPOSES ONLY -

BIDDING DOCUMENTS

MAY 26, 2020

Prepared By

Weston & Sampson design studio

85 Devonshire St., 3rd Floor,
Boston, MA 02109
(617) 412-4480
www.westonandsampson.com

SHEET INDEX

L0.01	SITE OVERVIEW - EXISTING CONDITIONS PLAN
L0.02	SITE OVERVIEW - PHASING PLAN
L1.00-L1.01	EXISTING CONDITIONS PLAN 1 & 2
L2.00-L2.01	SITE DEMOLITION AND PREPARATION PLAN 1 & 2
L3.00-L3.01	MATERIALS PLAN 1 & 2
L3.02	MATERIALS PLAN ENLARGEMENT
L4.00-L4.01	LAYOUTS PLAN 1 & 2
L4.02	LAYOUT PLAN- PLAYGROUND
L4.03	LAYOUT PLAN ENLARGEMENTS
L5.00-L5.01	GRADING PLAN 1 & 2
L5.02	GRADING ENLARGEMENTS
L5.03-L5.04	GRADING ENLARGEMENTS & SECTIONS 1 & 2
L6.00-L6.01	UTILITIES PLAN 1 & 2
L6.02	UTILITY PLAN ENLARGEMENT
L6.03	UTILITY PLAN ENLARGEMENT- STORMWATER CHAMBERS
L7.00-L7.01	PLANTING PLAN 1 & 2
L8.00	DETAILS 1- EROSION CONTROL
L8.01	DETAILS 2- CIVIL DETAILS
L8.02	DETAILS 3- CIVIL DETAILS
L8.03	DETAILS 4- PAVEMENT DETAILS
L8.04	DETAILS 5- SEATWALLS & RAMPS
L8.05	DETAILS 6- CONCRETE STAIRS & STONE MASONRY
L8.06	DETAILS 7- WOOD DECK & WOOD FIBER MULCH
L8.07	DETAILS 8- PLAYGROUND SURFACING
L8.08	DETAILS 9- FENCE & RETAINING WALL
L8.09	DETAILS 10- SOFTBALL DETAILS
L8.10	DETAILS 11- SPORTS LAYOUTS & LIGHT POLE DETAILS
L8.11	DETAILS 12- CHAIN LINK FENCE, BACKSTOP & SITE AMENITIES
L8.12	DETAILS 13- PLANTING DETAILS
IRR1.00 - IRR1.01	IRRIGATION PLAN 1 & 2
IRR1.02 - IRR1.04	IRRIGATION DETAILS 1-3
AQ1.00	SPRAY DECK LAYOUT & NOTES
AQ1.01	SPRAY DECK SECTION & DETAILS
AQ2.00	SPRAY DECK SITE PIPING
AQ2.01	SPRAY DECK PIPING & EQUIPMENT SCHEDULE
AQ2.02	SPRAY DECK MECHANICAL DETAILS
E0.01	ELECTRICAL LEGEND, ABBREVIATIONS & GENERAL NOTES
E0.02	ELECTRICAL SITE PLAN
E2.01	ELECTRICAL SPLASH PAD BONDING PLAN
E5.01	ELECTRICAL DETAILS
E6.01	ELECTRICAL DIAGRAMS

Locus Map

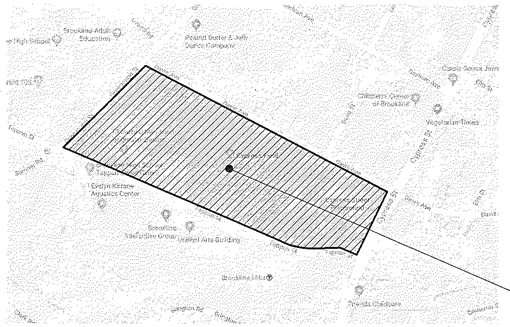

CYPRESS STREET PLAYGROUND
CYPRESS ST, BROOKLINE, MA 02445

Andrew M. Pappastergiou
COMMISSIONER OF PUBLIC WORKS

Peter M. Ditto
DIRECTOR OF ENGINEERING / TRANSPORTATION

DIRECTOR OF PARKS AND OPEN SPACE

May 26, 2020
DATE

COPYRIGHT 2020 WESTON & SAMPSON

LEGEND

LIMIT OF WORK
PROPERTY LINE

BCB	BIT. CONC. BERM
BW	BOTTOM OF WALL
TW	TOP OF WALL
TBM	TEMPORARY BENCH MARK
REC	RECORD
CALC	CALCULATED
LCC	LAND COURT CASE
CT.	CERTIFICATE OF TITLE
VGC	VERTICAL GRANITE CURB
BIT	BITUMINOUS
CONC	CONCRETE
TC	TOP OF CURB
BC	BOTTOM OF CURB
I=	INVERT ELEVATION
TT=	TOP OF TRAP
FND	FOUND
FOD	FULL OF DEBRIS
TR=	CENTERLINE OF TROUGH
TVP=	TOP OF VERTICAL PIPE
INACC.	INACCESSIBLE
SQ. FT.	SQUARE FEET
R=	RADIUS OR RIM ELEVATION
L=	LENGTH
TRANS.	TRANSFORMER
RC	REINFORCED CONCRETE
CIP	CAST IRON PIPE
■	BOUND FOUND WITH DRILL HOLE
SBDH	STONE BOUND WITH DRILL HOLE
PC	POINT OF CURVATURE
POC	POINT ON CURVE
FOD	FULL OF DEBRIS
TOD	TOP OF DEBRIS
TOW	TOP OF WATER

S	SEWER MANHOLE
D	DRAIN MANHOLE
E	ELECTRIC MANHOLE
T	TELEPHONE MANHOLE
C	CABLE TV MANHOLE
X	STEAM MANHOLE
MH	MANHOLE
	HYDRANT
GV	GAS VALVE
WV	WATER VALVE
	WATER SHUT OFF
	GAS SHUT OFF
	BORING
W	OBSERVATION WELL
	CATCH BASIN
	TRAFFIC CONTROL BOX
	TRAFFIC SIGNAL
	LIGHT POLE
	SPRINKLER HEAD

HH	ELECTRIC HANDHOLE
CV	IRRIGATION CONTROL VALVE
	BOLLARD
	SIGN
CO	CLEAN OUT
	BASKETBALL GOAL
	GUARD RAIL
—X—X—	METAL FENCE
—S—	SEWER
—D—	DRAIN
—W—	WATER
—G—	GAS
—E—	ELECTRIC
—T—	TELEPHONE
—C—	CABLE TELEVISION
—12"D(RCP)—	PIPE SIZE AND MATERIAL
—RCP—	REINFORCED CONCRETE PIPE
—T,C—	TELEPHONE, CABLE
—PVC—	POLYVINYL CHLORIDE
	WOOD FENCE
	WROUGHT IRON FENCE

NOTES:

1) BENCH MARK INFORMATION:

BENCH MARK USED:

MY2083 DISK FOUND STAMPED E-37 AT THE NORTH EAST CORNER OF CYPRESS STREET AND TAPPAN STREET.
ELEVATION= 54.01(NAVD88) OR 60.61(BTB) (SEE DATUM SKETCH)

TEMPORARY BENCH MARKS SET:

TBM-FS5, X-CUT ON HYDRANT LEFT BOLT OVER MAIN OUTLET LOCATED AT THE INTERSECTION OF THE NORTHERLY SIDE OF TAPPAN STREET AND THE EASTERLY SIDELINE OF GREENOUGH STREET.
ELEVATION = 52.72

TBM-DS1, X-CUT ON LEFT FRONT HYDRANT BOLT LOCATED AT THE INTERSECTION OF THE SOUTHERLY SIDE OF DAVIS AVENUE AND THE EASTERLY SIDELINE OF GREENOUGH STREET.
ELEVATION = 51.52

TBM-DS3, X-CUT ON LEFT FRONT HYDRANT BOLT LOCATED ON THE SOUTHERLY SIDE OF TAPPAN STREET, APPROXIMATELY 375 FEET WEST OF CYPRESS STREET.
ELEVATION = 49.53

TBM-DS4, CHISELED SQUARE ON THE SOUTHEASTERLY CORNER OF A CONRETE PAD UNDERNEATH A TRAFFIC SIGNAL CONTROL BOX, LOCATED AT THE INTERSECTION OF THE NORTHERLY SIDE OF TAPPAN STREET AND THE WESTERLY SIDELINE OF CYPRESS STREET.
ELEVATION = 61.40

TBM-DS5, LEFT OUTER CORNER OF THE LOWEST STONE STEP AT ENTRANCE TO #173 DAVIS AVENUE.
ELEVATION = 46.91

2) ELEVATIONS REFER TO BROOKLINE TOWN BASE (BTB)

3) CONTOUR INTERVAL EQUALS ONE (1) FOOT.

4) UTILITY INFORMATION SHOWN IS BASED ON BOTH A FIELD SURVEY AND PLANS OF RECORD. THE LOCATIONS OF UNDERGROUND PIPES AND CONDUITS HAVE BEEN DETERMINED FROM THE AFOREMENTIONED RECORD PLANS AND ARE APPROXIMATE ONLY. WE CANNOT ASSUME RESPONSIBILITY FOR DAMAGES INCURRED AS A RESULT OF UTILITIES THAT ARE OMITTED OR INACCURATELY SHOWN ON SAID RECORD PLANS, SINCE SUBSURFACE UTILITIES CANNOT BE VISIBLY VERIFIED. BEFORE PLANNING FUTURE CONNECTIONS, THE PROPER UTILITY ENGINEERING DEPARTMENT SHOULD BE CONSULTED AND THE ACTUAL LOCATION OF SUBSURFACE STRUCTURES SHOULD BE DETERMINED IN THE FIELD. CALL, TOLL FREE, THE DIG SAFE CALL CENTER AT 1-888-344-7233 SEVENTY-TWO HOURS PRIOR TO EXCAVATION.

5) THIS DOCUMENT IS AN INSTRUMENT OF SERVICE OF FELDMAN LAND SURVEYORS ISSUED TO OUR CLIENT FOR PURPOSES RELATED DIRECTLY AND SOLELY TO FELDMAN LAND SURVEYORS' SCOPE OF SERVICES UNDER CONTRACT TO OUR CLIENT FOR THIS PROJECT. ANY USE OR REUSE OF THIS DOCUMENT FOR ANY REASON BY ANY PARTY FOR PURPOSES UNRELATED DIRECTLY AND SOLELY TO SAID CONTRACT SHALL BE AT THE USER'S SOLE AND EXCLUSIVE RISK AND LIABILITY, INCLUDING LIABILITY FOR VIOLATION OF COPYRIGHT LAWS, UNLESS WRITTEN CONSENT IS PROVIDED BY FELDMAN LAND SURVEYORS.

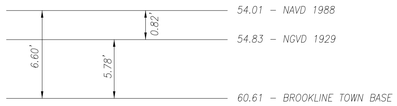

DATUM SKETCH:
RELATIONSHIP OF DATUM PLANES
NOT TO SCALE

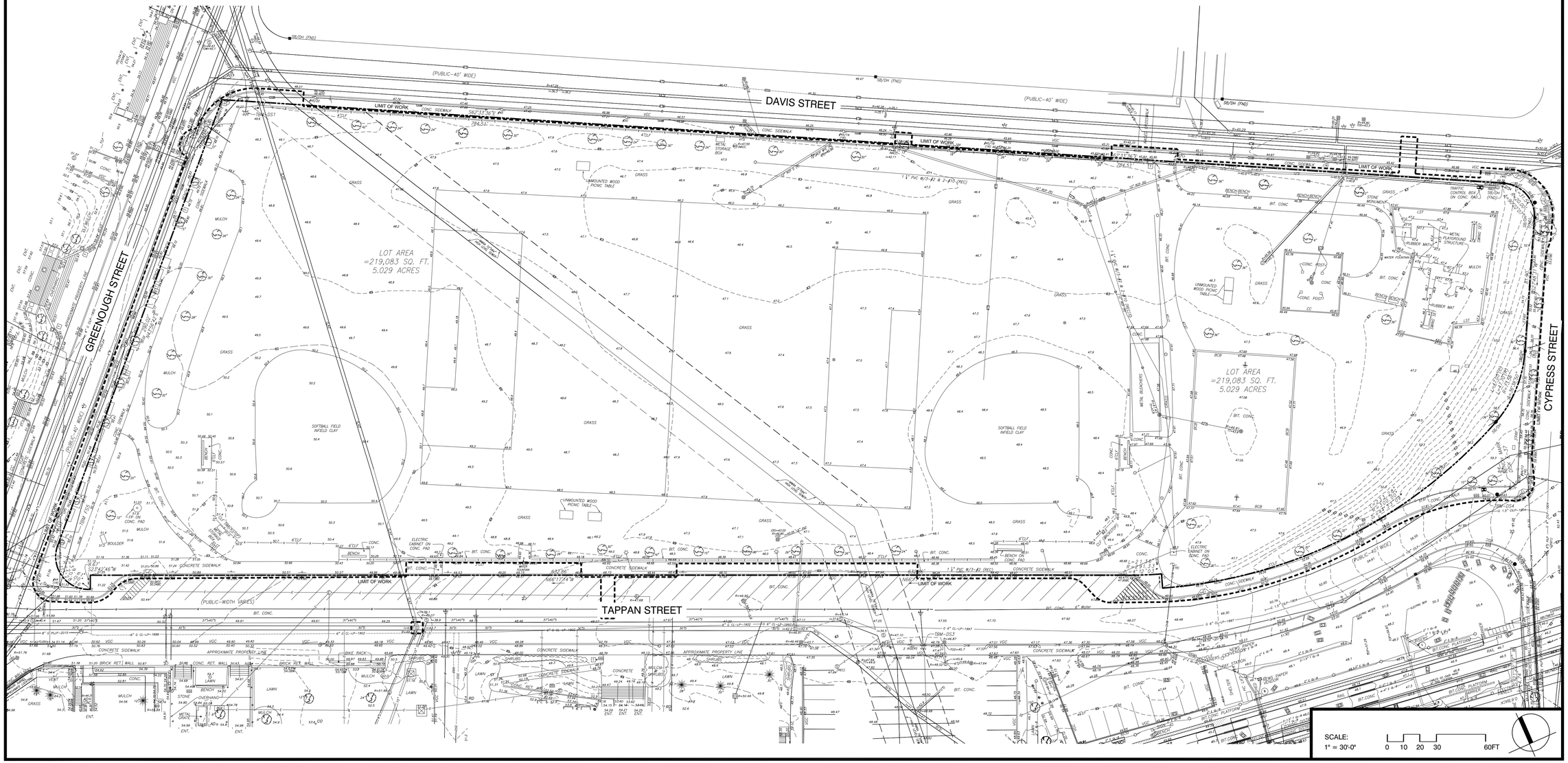

Project:

TOWN OF BROOKLINE, MA

CYPRESS STREET PLAYGROUND

Weston & Sampson

85 Devonshire Street,
3rd Floor, Boston, MA 02109
617.412.4480 800.SAMPSON
www.westonandsampson.com

Consultants:

Revisions:

No.	Date	Description

Seal:

Issued For:

BIDDING DOCUMENTS

Scale:	AS SHOWN
Date:	MAY 26, 2020
Drawn By:	LR, EB, HC
Reviewed By:	BMK
Approved By:	ERB
W&S Project No:	2190095
W&S File No:	

Drawing Title:

SITE OVERVIEW - EXISTING CONDITIONS PLAN

Sheet Number:

L0.01

COPYRIGHT 2020 WESTON & SAMPSON

LEGEND

LIMITS OF PHASED WORK

NOTES

1. CONTRACTOR WILL BE REQUIRED TO ADJUST CONSTRUCTION FENCE AS NECESSARY TO PERFORM WORK AT SIDEWALKS AND PROVIDE SAFE PEDESTRIAN ACCESS AT SIDEWALKS THROUGHOUT THE DURATION OF THE CONSTRUCTION PERIOD.
2. CONTRACTOR MAY ONLY DEMOLISH AND REPLACE SIDEWALK IN 100 FT. LENGTHS AND WITHIN 1 WEEK TIME PERIODS.
3. CONTRACTOR SHALL COORDINATE WITH HIGH SCHOOL CONSTRUCTION PROJECT AS IT RELATES TO SIDEWALK CONSTRUCTION AND SCHEDULE TO PERFORM THE WORK AND MAINTAIN ASSOCIATED MEANS OF PEDESTRIAN CIRCULATION. CONTRACTOR MUST INSTALL TEMPORARY SIDEWALK WITH DETOUR SIGNS WHEN CLOSING ANY SIDEWALK, SEE DETAILS.

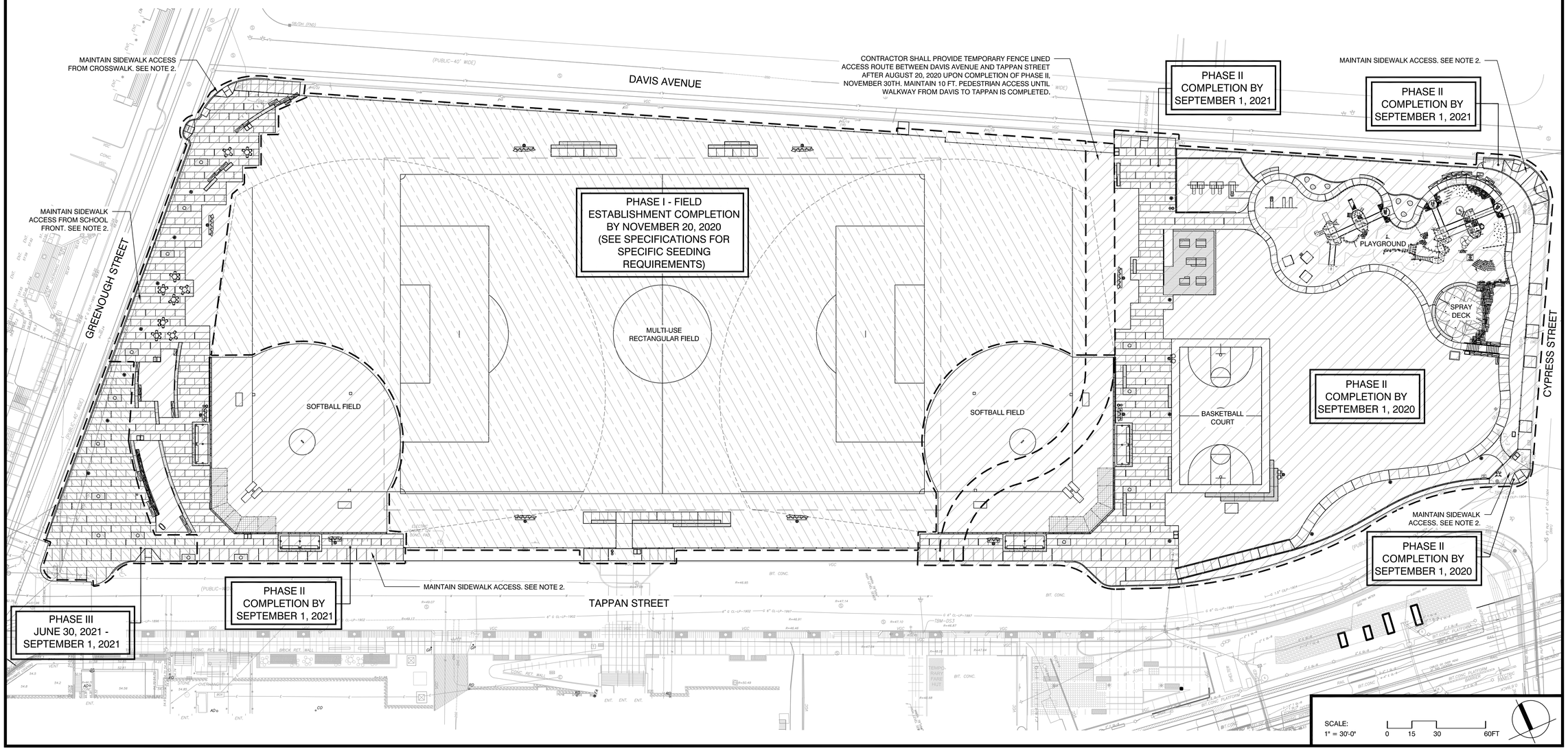

Project:

TOWN OF BROOKLINE, MA

CYPRESS STREET PLAYGROUND

Weston & Sampson

85 Devonshire Street,
3rd Floor, Boston, MA 02109
617.412.4480 800.SAMPSON
www.westonandsampson.com

Consultants:

Revisions:

No.	Date	Description

Seal:

Issued For:

BIDDING DOCUMENTS

Scale:	AS SHOWN
Date:	MAY 26, 2020
Drawn By:	LR, EB, HC
Reviewed By:	BMK
Approved By:	ERB
W&S Project No:	2190095
W&S File No:	

Drawing Title:

SITE OVERVIEW - PHASING PLAN

Sheet Number:

L0.02

COPYRIGHT 2020 WESTON & SAMPSON

LEGEND

LIMIT OF WORK
MATCH LINE

BCB BIT. CONC. BERM
BW BOTTOM OF WALL
TW TOP OF WALL
TBM TEMPORARY BENCH MARK
REC RECORD
CALC CALCULATED
LCC LAND COURT CASE
CT. CERTIFICATE OF TITLE
VGC VERTICAL GRANITE CURB
BIT BITUMINOUS
CONC CONCRETE
TC TOP OF CURB
BC BOTTOM OF CURB
I= INVERT ELEVATION
TT= TOP OF TRAP
FND FOUND
FOD FULL OF DEBRIS
TR= CENTERLINE OF TROUGH
TVP= TOP OF VERTICAL PIPE
INACC. INACCESSIBLE
SQ. FT. SQUARE FEET
R= RADIUS OR RIM ELEVATION
L= LENGTH
TRANS. TRANSFORMER
RC REINFORCED CONCRETE
CIP CAST IRON PIPE
BOUND FOUND WITH DRILL HOLE
SBDH STONE BOUND WITH DRILL HOLE
PC POINT OF CURVATURE
POC POINT ON CURVE
FOD FULL OF DEBRIS
TOD TOP OF DEBRIS
TOW TOP OF WATER

SEWER MANHOLE
DRAIN MANHOLE
ELECTRIC MANHOLE
TELEPHONE MANHOLE
CABLE TV MANHOLE
STEAM MANHOLE
MANHOLE
HYDRANT
GAS VALVE
WATER VALVE
WATER SHUT OFF
GAS SHUT OFF
BORING
OBSERVATION WELL
CATCH BASIN
TRAFFIC CONTROL BOX
TRAFFIC SIGNAL
LIGHT POLE
SPRINKLER HEAD

ELECTRIC HANDHOLE
IRRIGATION CONTROL VALVE
BOLLARD
SIGN
CLEAN OUT
BASKETBALL GOAL
GUARD RAIL
METAL FENCE
SEWER
DRAIN
WATER
GAS
ELECTRIC
TELEPHONE
CABLE TELEVISION
PIPE SIZE AND MATERIAL
REINFORCED CONCRETE PIPE
TELEPHONE, CABLE
POLYVINYL CHLORIDE
WOOD FENCE
WROUGHT IRON FENCE

B-11 BORING DESIGNATION AND APPROXIMATE LOCATION
TP-1 TEST-PIT DESIGNATION AND APPROXIMATE LOCATION
HE-1 HAND EXCAVATION DESIGNATION AND APPROXIMATE LOCATION

SURVEY NOTES

SEE L1.01

GENERAL NOTES

1. LOCATIONS OF ANY UTILITIES SHOWN ON THIS PLAN ARE APPROXIMATE ONLY. THE CONTRACTOR SHALL BE RESPONSIBLE FOR LOCATING AND PROTECTING ALL EXISTING UTILITIES AND REPAIRING ANY DAMAGE DONE DURING CONSTRUCTION. THE CONTRACTOR SHALL BE RESPONSIBLE FOR ALL ON-SITE COORDINATION WITH UTILITY COMPANIES AND PUBLIC AGENCIES AND FOR OBTAINING ALL REQUIRED PERMITS AND PAYING ALL REQUIRED FEES. IN ACCORDANCE WITH M.G.L. CHAPTER 82, SECTION 40, INCLUDING AMENDMENTS, CONTRACTORS SHALL NOTIFY ALL UTILITY COMPANIES AND GOVERNMENT AGENCIES IN WRITING PRIOR TO EXCAVATION. CONTRACTOR SHALL ALSO CALL "DIG SAFE" AT (888) 344-7233 NO LESS THAN 72 HOURS, (EXCLUSIVE OF WEEKENDS AND HOLIDAYS), PRIOR TO SUCH EXCAVATION. DOCUMENTATION OF REQUESTS SHALL BE PROVIDED TO PROJECT REPRESENTATIVE PRIOR TO EXCAVATION WORK.
2. CONTRACTOR SHALL BE RESPONSIBLE FOR REVIEWING ALL DRAWINGS AND SPECIFICATIONS TO DETERMINE THE EXTENT OF EXCAVATION AND DEMOLITION REQUIRED TO RECEIVE SITE IMPROVEMENTS.
3. THE CONTRACTOR SHALL BE RESPONSIBLE FOR VISITING THE SITE AND REVIEWING THE DRAWINGS AND ASSUMES RESPONSIBILITY OF VERIFYING ALL EXISTING CONDITIONS AND MATERIALS SHOWN WITHIN THE PROJECT CONTRACT LIMITS.
4. ANY DISCREPANCIES OR CONFLICTS BETWEEN THE DRAWINGS AND EXISTING CONDITIONS, EXISTING CONDITIONS TO REMAIN, TEMPORARY CONSTRUCTION, PERMANENT CONSTRUCTION AND WORK OF ADJACENT CONTRACTS SHALL BE BROUGHT TO THE ATTENTION OF THE OWNER BEFORE PROCEEDING. ITEMS ENCOUNTERED IN AREAS OF EXCAVATION THAT ARE NOT INDICATED ON THE DRAWINGS, BUT ARE VISIBLE ON SURFACE, SHALL BE THE CONTRACTOR'S RESPONSIBILITY AND SHALL BE REMOVED AT NO ADDITIONAL COST TO THE OWNER.
5. ANY ALTERATIONS TO THESE DRAWINGS MADE IN THE FIELD DURING CONSTRUCTION SHALL BE RECORDED BY THE GENERAL CONTRACTOR ON "AS-BUILT" DRAWINGS.
6. ALL AREAS DISTURBED BY THE CONTRACTOR'S OPERATIONS OUTSIDE THE PROJECT LIMITS, SHALL BE RESTORED TO THE ORIGINAL CONDITION BY THE CONTRACTOR AT NO ADDITIONAL COST TO AND TO THE SATISFACTION OF THE OWNER.
7. THE CONTRACTOR SHALL TAKE ALL NECESSARY PRECAUTIONS TO PROTECT HIS EMPLOYEES, AS WELL AS PUBLIC USERS FROM INJURY DURING THE ENTIRE CONSTRUCTION PERIOD USING ALL NECESSARY SAFEGUARDS, INCLUDING BUT NOT LIMITED TO, TEMPORARY WALKS, STRUCTURES, PROTECTIVE BARRIERS, COVERING, OR FENCES AS NEEDED.
8. THE CONTRACTOR SHALL SUPPLY THE OWNER WITH THE NAME OF THE OSHA "COMPETENT PERSON" PRIOR TO CONSTRUCTION.
9. FILLING OF EXCAVATED AREAS SHALL NOT TAKE PLACE WITHOUT THE PRESENCE OR PERMISSION OF THE OWNER.
10. EXISTING TREES TO REMAIN SHALL BE PROTECTED FROM CONSTRUCTION ACTIVITIES. NO STOCKPILING OF MATERIAL, EQUIPMENT OR VEHICULAR TRAFFIC SHALL BE ALLOWED WITHIN THE DRIP LINE OF TREES TO REMAIN. NO GUYS SHALL BE ATTACHED TO ANY TREE TO REMAIN. WHEN NECESSARY OR AS DIRECTED BY THE ENGINEER, THE CONTRACTOR SHALL ERECT TEMPORARY BARRIERS FOR THE PROTECTION OF EXISTING TREES DURING CONSTRUCTIONS.
11. NO CUTTING OR FILLING SHALL OCCUR WITHIN FIVE (5) FEET OF EXISTING TREES TO REMAIN WITHOUT THE APPROVAL OF THE OWNER OR OWNER'S REPRESENTATIVE, UNLESS OTHERWISE NOTED ON THE DRAWINGS.
12. ANY QUANTITIES SHOWN ON PLANS ARE FOR COMPARATIVE BIDDING PURPOSES ONLY. IT IS THE CONTRACTOR'S RESPONSIBILITY TO VISIT THE PROJECT SITE TO VERIFY ALL QUANTITIES PRIOR TO SUBMITTING THEIR BID.
13. THE LAYOUT OF ALL NEW WALKWAYS AND THE GRADING OF ALL SLOPES AND CROSS SLOPES SHALL CONFORM TO THE COMMONWEALTH OF MASSACHUSETTS RULES AND REGULATIONS FOR HANDICAP ACCESS CMR 521, AND THE AMERICANS WITH DISABILITIES ACT (ADA), TITLE 3. THE CONTRACTOR SHALL NOTIFY THE OWNER IMMEDIATELY OF ANY DISCREPANCIES BETWEEN ACTUAL CONDITIONS AND THOSE REQUIRED.
14. ALL EXISTING DRAINAGE FACILITIES TO REMAIN SHALL BE MAINTAINED FREE OF DEBRIS, SOIL, SEDIMENT, AND FOREIGN MATERIAL AND KEPT OPERATIONAL THROUGHOUT THE LIFE OF THE CONTRACT. REMOVE ALL SOIL, SEDIMENT, DEBRIS AND FOREIGN MATERIAL FROM ALL DRAINAGE STRUCTURES, INCLUDING BUT NOT LIMITED TO, DRAINAGE INLETS, MANHOLES AND CATCH BASINS WITHIN THE LIMIT OF WORK AND DRAINAGE STRUCTURES OUTSIDE THE LIMIT OF WORK THAT ARE IMPACTED BY THE WORK FOR THE ENTIRE DURATION OF CONSTRUCTION.
15. CONTRACTOR'S STAGING AREA MUST BE WITHIN THE CONTRACT LIMIT LINE. ANY OTHER AREAS THAT THE CONTRACTOR MAY WISH TO USE FOR STAGING MUST BE COORDINATED WITH THE OWNER.
16. CONTRACTOR SHALL COORDINATE ALL WORK WITH THE TOWN OF BROOKLINE'S DEPARTMENT OF PUBLIC WORKS, DIVISION OF PARKS AND OPEN SPACE AND DIVISION OF ENGINEERING.
17. FOR SOIL BORING AND TEST PIT RESULTS REFER TO THE APPENDIX IN THE SPECIFICATIONS.

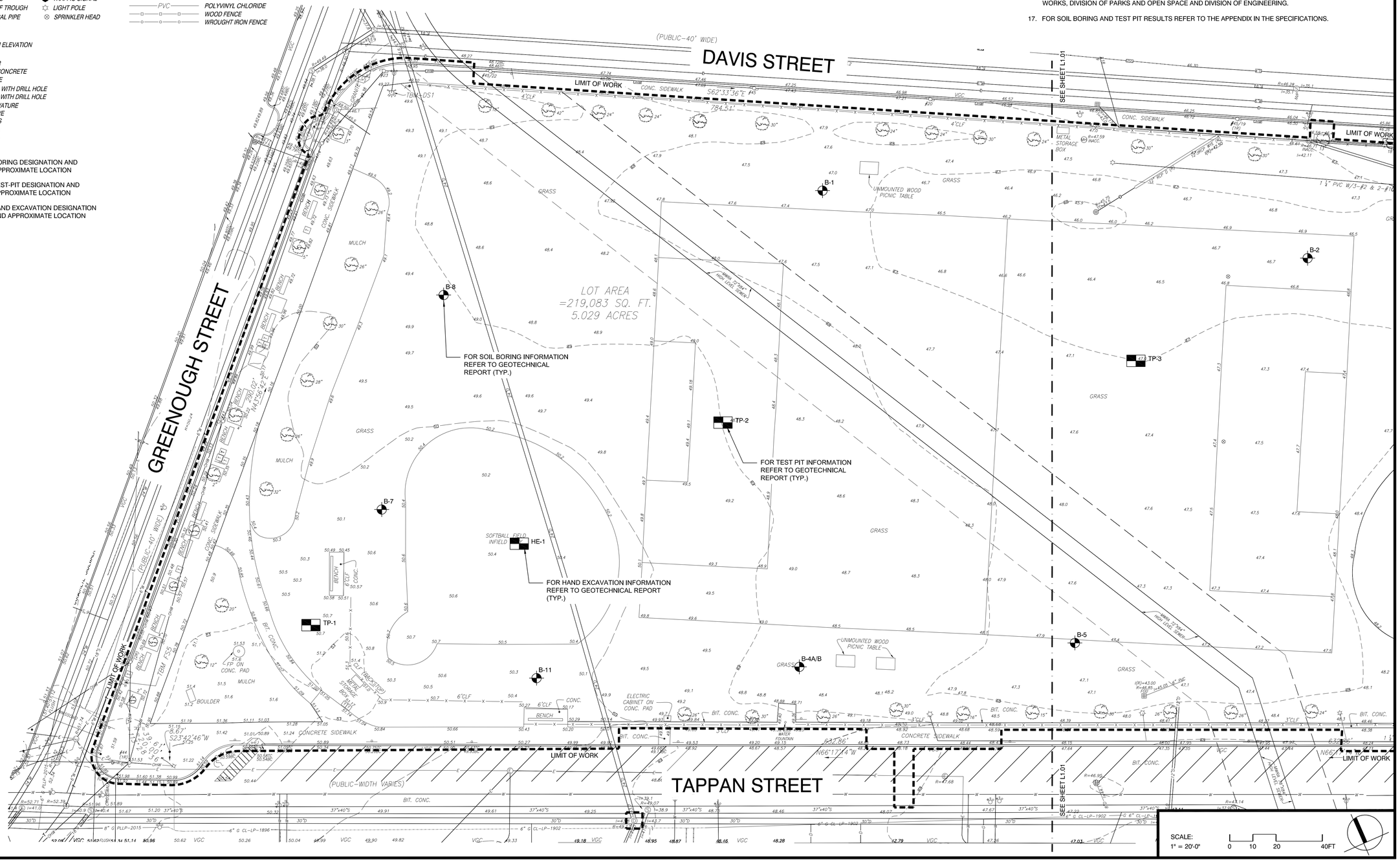

Project:

TOWN OF BROOKLINE, MA

CYPRESS STREET PLAYGROUND

Weston & Sampson

85 Devonshire Street,
3rd Floor, Boston, MA 02109
617.412.4480 800.SAMPSON
www.westonandsampson.com

Consultants:

Revisions:

No.	Date	Description

Seal:

Issued For:

BIDDING DOCUMENTS

Scale:	AS SHOWN
Date:	MAY 26, 2020
Drawn By:	LR, EB, HC
Reviewed By:	BMK
Approved By:	ERB
W&S Project No:	2190095
W&S File No:	

Drawing Title:

EXISTING CONDITIONS PLAN

Sheet Number:

L1.00

COPYRIGHT 2020 WESTON & SAMPSON

LEGEND

LIMIT OF WORK

MATCH LINE

BCB	BIT. CONC. BERM
BW	BOTTOM OF WALL
TW	TOP OF WALL
TBM	TEMPORARY BENCH MARK
REC	RECORD
CALC	CALCULATED
LCC	LAND COURT CASE
CT.	CERTIFICATE OF TITLE
VGC	VERTICAL GRANITE CURB
BIT	BITUMINOUS
CONC	CONCRETE
TC	TOP OF CURB
BC	BOTTOM OF CURB
I=	INVERT ELEVATION
TT=	TOP OF TRAP
FND	FOUND
FOD	FULL OF DEBRIS
TR=	CENTERLINE OF TROUGH
TVP=	TOP OF VERTICAL PIPE
INACC.	INACCESSIBLE
SQ. FT.	SQUARE FEET
R=	RADIUS OR RIM ELEVATION
L=	LENGTH
TRANS.	TRANSFORMER
RC	REINFORCED CONCRETE
CIP	CAST IRON PIPE
	BOUND FOUND WITH DRILL HOLE
SBDH	STONE BOUND WITH DRILL HOLE
PC	POINT OF CURVATURE
POC	POINT ON CURVE
FOD	FULL OF DEBRIS
TOD	TOP OF DEBRIS
TOW	TOP OF WATER

S	SEWER MANHOLE
D	DRAIN MANHOLE
E	ELECTRIC MANHOLE
T	TELEPHONE MANHOLE
C	CABLE TV MANHOLE
X	STEAM MANHOLE
MH	MANHOLE
	HYDRANT
GV	GAS VALVE
WV	WATER VALVE
	WATER SHUT OFF
	GAS SHUT OFF
	BORING
	OBSERVATION WELL
	CATCH BASIN
	TRAFFIC CONTROL BOX
	TRAFFIC SIGNAL
	LIGHT POLE
	SPRINKLER HEAD

	ELECTRIC HANDHOLE
CV	IRRIGATION CONTROL VALVE
	BOLLARD
	SIGN
CO	CLEAN OUT
	BASKETBALL GOAL
	GUARD RAIL
X	METAL FENCE
S	SEWER
D	DRAIN
W	WATER
G	GAS
E	ELECTRIC
T	TELEPHONE
C	CABLE TELEVISION
12"D(RCP)	PIPE SIZE AND MATERIAL
RCP	REINFORCED CONCRETE PIPE
T,C	TELEPHONE, CABLE
PVC	POLYVINYL CHLORIDE
	WOOD FENCE
	WROUGHT IRON FENCE

B-11 BORING DESIGNATION AND APPROXIMATE LOCATION

TP-1 TEST-PIT DESIGNATION AND APPROXIMATE LOCATION

HE-1 HAND EXCAVATION DESIGNATION AND APPROXIMATE LOCATION

GENERAL NOTES

1. LOCATIONS OF ANY UTILITIES SHOWN ON THIS PLAN ARE APPROXIMATE ONLY. THE CONTRACTOR SHALL BE RESPONSIBLE FOR LOCATING AND PROTECTING ALL EXISTING UTILITIES AND REPAIRING ANY DAMAGE DONE DURING CONSTRUCTION. THE CONTRACTOR SHALL BE RESPONSIBLE FOR ALL ON-SITE COORDINATION WITH UTILITY COMPANIES AND PUBLIC AGENCIES AND FOR OBTAINING ALL REQUIRED PERMITS AND PAYING ALL REQUIRED FEES. IN ACCORDANCE WITH M.G.L. CHAPTER 82, SECTION 40, INCLUDING AMENDMENTS, CONTRACTORS SHALL NOTIFY ALL UTILITY COMPANIES AND GOVERNMENT AGENCIES IN WRITING PRIOR TO EXCAVATION. CONTRACTOR SHALL ALSO CALL "DIG SAFE" AT (888) 344-7233 NO LESS THAN 72 HOURS, (EXCLUSIVE OF WEEKENDS AND HOLIDAYS), PRIOR TO SUCH EXCAVATION. DOCUMENTATION OF REQUESTS SHALL BE PROVIDED TO PROJECT REPRESENTATIVE PRIOR TO EXCAVATION WORK.
2. CONTRACTOR SHALL BE RESPONSIBLE FOR REVIEWING ALL DRAWINGS AND SPECIFICATIONS TO DETERMINE THE EXTENT OF EXCAVATION AND DEMOLITION REQUIRED TO RECEIVE SITE IMPROVEMENTS.
3. THE CONTRACTOR SHALL BE RESPONSIBLE FOR VISITING THE SITE AND REVIEWING THE DRAWINGS AND ASSUMES RESPONSIBILITY OF VERIFYING ALL EXISTING CONDITIONS AND MATERIALS SHOWN WITHIN THE PROJECT CONTRACT LIMITS.
4. ANY DISCREPANCIES OR CONFLICTS BETWEEN THE DRAWINGS AND EXISTING CONDITIONS, EXISTING CONDITIONS TO REMAIN, TEMPORARY CONSTRUCTION, PERMANENT CONSTRUCTION AND WORK OF ADJACENT CONTRACTS SHALL BE BROUGHT TO THE ATTENTION OF THE OWNER BEFORE PROCEEDING. ITEMS ENCOUNTERED IN AREAS OF EXCAVATION THAT ARE NOT INDICATED ON THE DRAWINGS, BUT ARE VISIBLE ON SURFACE, SHALL BE THE CONTRACTOR'S RESPONSIBILITY AND SHALL BE REMOVED AT NO ADDITIONAL COST TO THE OWNER.
5. ANY ALTERATIONS TO THESE DRAWINGS MADE IN THE FIELD DURING CONSTRUCTION SHALL BE RECORDED BY THE GENERAL CONTRACTOR ON "AS-BUILT" DRAWINGS.
6. ALL AREAS DISTURBED BY THE CONTRACTOR'S OPERATIONS OUTSIDE THE PROJECT LIMITS, SHALL BE RESTORED TO THE ORIGINAL CONDITION BY THE CONTRACTOR AT NO ADDITIONAL COST TO AND TO THE SATISFACTION OF THE OWNER.
7. THE CONTRACTOR SHALL TAKE ALL NECESSARY PRECAUTIONS TO PROTECT HIS EMPLOYEES, AS WELL AS PUBLIC USERS FROM INJURY DURING THE ENTIRE CONSTRUCTION PERIOD USING ALL NECESSARY SAFEGUARDS, INCLUDING BUT NOT LIMITED TO, TEMPORARY WALKS, STRUCTURES, PROTECTIVE BARRIERS, COVERING, OR FENCES AS NEEDED.
8. THE CONTRACTOR SHALL SUPPLY THE OWNER WITH THE NAME OF THE OSHA "COMPETENT PERSON" PRIOR TO CONSTRUCTION.
9. FILLING OF EXCAVATED AREAS SHALL NOT TAKE PLACE WITHOUT THE PRESENCE OR PERMISSION OF THE OWNER.
10. EXISTING TREES TO REMAIN SHALL BE PROTECTED FROM CONSTRUCTION ACTIVITIES. NO STOCKPILING OF MATERIAL, EQUIPMENT OR VEHICULAR TRAFFIC SHALL BE ALLOWED WITHIN THE DRIP LINE OF TREES TO REMAIN. NO GUYS SHALL BE ATTACHED TO ANY TREE TO REMAIN. WHEN NECESSARY OR AS DIRECTED BY THE ENGINEER, THE CONTRACTOR SHALL ERECT TEMPORARY BARRIERS FOR THE PROTECTION OF EXISTING TREES DURING CONSTRUCTIONS.
11. NO CUTTING OR FILLING SHALL OCCUR WITHIN FIVE (5) FEET OF EXISTING TREES TO REMAIN WITHOUT THE APPROVAL OF THE OWNER OR OWNER'S REPRESENTATIVE, UNLESS OTHERWISE NOTED ON THE DRAWINGS.
12. ANY QUANTITIES SHOWN ON PLANS ARE FOR COMPARATIVE BIDDING PURPOSES ONLY. IT IS THE CONTRACTOR'S RESPONSIBILITY TO VISIT THE PROJECT SITE TO VERIFY ALL QUANTITIES PRIOR TO SUBMITTING THEIR BID.
13. THE LAYOUT OF ALL NEW WALKWAYS AND THE GRADING OF ALL SLOPES AND CROSS SLOPES SHALL CONFORM TO THE COMMONWEALTH OF MASSACHUSETTS RULES AND REGULATIONS FOR HANDICAP ACCESS CMR 521, AND THE AMERICANS WITH DISABILITIES ACT (ADA), TITLE 3. THE CONTRACTOR SHALL NOTIFY THE OWNER IMMEDIATELY OF ANY DISCREPANCIES BETWEEN ACTUAL CONDITIONS AND THOSE REQUIRED.
14. ALL EXISTING DRAINAGE FACILITIES TO REMAIN SHALL BE MAINTAINED FREE OF DEBRIS, SOIL, SEDIMENT, AND FOREIGN MATERIAL AND KEPT OPERATIONAL THROUGHOUT THE LIFE OF THE CONTRACT. REMOVE ALL SOIL, SEDIMENT, DEBRIS AND FOREIGN MATERIAL FROM ALL DRAINAGE STRUCTURES, INCLUDING BUT NOT LIMITED TO, DRAINAGE INLETS, MANHOLES AND CATCH BASINS WITHIN THE LIMIT OF WORK AND DRAINAGE STRUCTURES OUTSIDE THE LIMIT OF WORK THAT ARE IMPACTED BY THE WORK FOR THE ENTIRE DURATION OF CONSTRUCTION.
15. CONTRACTOR'S STAGING AREA MUST BE WITHIN THE CONTRACT LIMIT LINE. ANY OTHER AREAS THAT THE CONTRACTOR MAY WISH TO USE FOR STAGING MUST BE COORDINATED WITH THE OWNER.
16. CONTRACTOR SHALL COORDINATE ALL WORK WITH THE TOWN OF BROOKLINE'S DEPARTMENT OF PUBLIC WORKS, DIVISION OF PARKS AND OPEN SPACE AND DIVISION OF ENGINEERING.
17. FOR SOIL BORING AND TEST PIT RESULTS REFER TO THE APPENDIX IN THE SPECIFICATIONS.

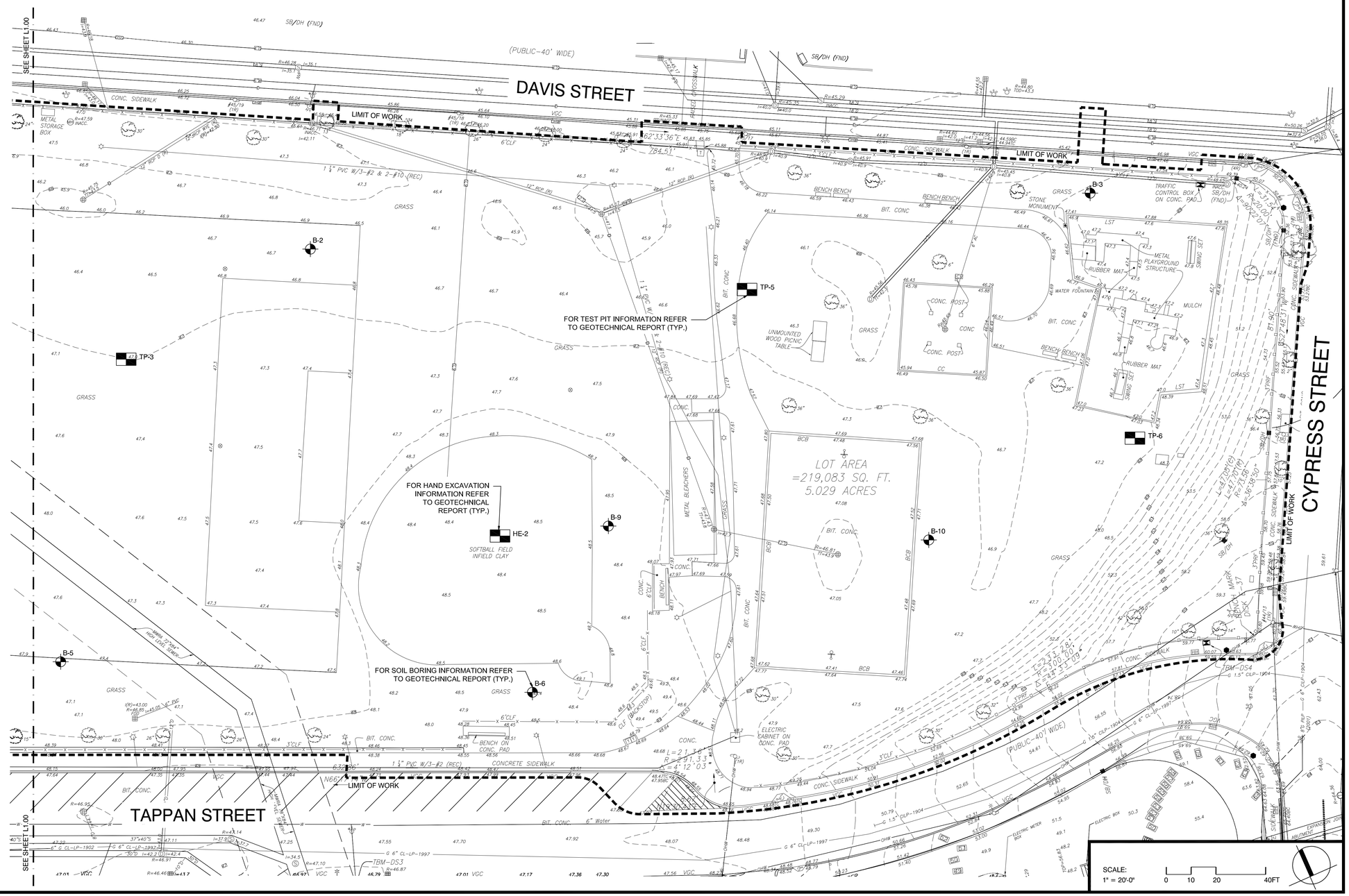

Project:

TOWN OF BROOKLINE, MA

CYPRESS STREET PLAYGROUND

Weston & Sampson

85 Devonshire Street,
3rd Floor, Boston, MA 02109
617.412.4480 800.SAMPSON
www.westonandsampson.com

Consultants:

Revisions:

No.	Date	Description

Seal:

Issued For:

BIDDING DOCUMENTS

Scale:	AS SHOWN
Date:	MAY 26, 2020
Drawn By:	LR, EB, HC
Reviewed By:	BMK
Approved By:	ERB
W&S Project No:	2190095
W&S File No:	

Drawing Title:

EXISTING CONDITIONS PLAN

Sheet Number:

L1.01

COPYRIGHT 2020 WESTON & SAMPSON

LEGEND

- LIMIT OF WORK
- MATCH LINE
- R&D BITUMINOUS CONCRETE PAVING, FULL DEPTH, COMPLETE
- R&D CONCRETE PAVING, FULL DEPTH COMPLETE
- STRIP & STOCKPILE EXISTING TOPSOIL (5" DEPTH)
- R&D EXISTING MULCH AND TOPSOIL
- STRIP & REMOVE INFIELD MIX (12" DEPTH)
- STOCKPILE LOCATION, TYP.
- SILTATION FENCE AND EROSION CONTROLS
- 6' HT. TEMPORARY CONSTRUCTION FENCING, TYP.
- SAW CUT
- R&D FENCING, COMPLETE
- R&R CURB, TYP.
- R&D EXISTING TREE, TYP.
- R&R EXISTING TREE, TYP.
- PROTECT EXISTING STRUCTURE, TYP.
- R&D EXISTING BENCH, TYP.
- INLET SEDIMENTATION CONTROL
- REMOVE AND DISPOSE OF EXISTING BASKETBALL HOOP, POST, & FOOTING COMPLETE
- CONSTRUCTION ENTRANCE PAD
- CAP AND ABANDON DRAINAGE/UTILITY STRUCTURES
- R&D SPORTS/PEDESTRAIN LIGHT FIXTURES, CONDUITS, WIRES, COMPLETE, TYP.
- TREE PROTECTION, TYP.

R&D REMOVE & DISPOSE
R&S REMOVE & SALVAGE
R&R REMOVE & RESET

EROSION AND SEDIMENT CONTROL NOTES

1. ALL SEDIMENT AND EROSION CONTROL DEVICES SHALL BE PUT INTO PLACE PRIOR TO BEGINNING ANY CONSTRUCTION OR DEMOLITION. REFER TO PLAN FOR APPROXIMATE LOCATION OF EROSION AND SEDIMENT CONTROL. REFER TO SPECS AND DETAILS FOR TYPE OF EROSION AND SEDIMENT CONTROL.
2. THE CONTRACTOR SHALL BE RESPONSIBLE FOR THE CONTINUAL MAINTENANCE OF ALL EROSION AND SEDIMENT CONTROL DEVICES THROUGHOUT THE DURATION OF THE PROJECT.
3. EXCAVATED MATERIAL STOCKPILED ON THE SITE SHALL BE SURROUNDED BY A RING OF UNBROKEN SEDIMENT AND EROSION CONTROL FENCE. THE LIMITS OF ALL GRADING AND DISTURBANCE SHALL BE KEPT TO A MINIMUM WITHIN THE APPROVED AREA OF CONSTRUCTION. ALL AREAS OUTSIDE OF THE LIMIT OF CONTRACT SHALL REMAIN TOTALLY UNDISTURBED UNLESS OTHERWISE APPROVED BY OWNER'S REPRESENTATIVE.
4. ALL CATCH BASINS AND DRAIN GRATES WITHIN LIMIT OF CONTRACT SHALL BE PROTECTED WITH CATCH BASIN FILTERS DURING THE ENTIRE DURATION OF CONSTRUCTION. SEE DETAILS.
5. EROSION CONTROL BARRIERS TO BE INSTALLED AT THE TOE OF SLOPES. SEE GRADING & DRAINAGE PLANS, NOTES, DETAILS AND SPECIFICATIONS.
6. THE CONTRACTOR SHALL PROVIDE DUST CONTROL FOR CONSTRUCTION OPERATIONS AS APPROVED BY OWNER.
7. ALL POINTS OF CONSTRUCTION EGRESS OR INGRESS SHALL BE MAINTAINED TO PREVENT TRACKING OR FLOWING OF SEDIMENT ON TO PUBLIC/PRIVATE ROADS.

SITE DEMOLITION & PREPARATION NOTES

1. THE CONTRACTOR SHALL INCLUDE IN THE BID THE COST OF REMOVING ANY EXISTING SITE FEATURES AND APPURTENANCES NECESSARY TO ACCOMPLISH THE CONSTRUCTION OF THE PROPOSED SITE IMPROVEMENTS. THE CONTRACTOR SHALL ALSO INCLUDE IN THE BID THE COST NECESSARY TO RESTORE SUCH ITEMS IF THEY ARE SCHEDULED TO REMAIN AS PART OF THE FINAL SITE IMPROVEMENTS. REFER TO PLANS TO DETERMINE EXCAVATION, DEMOLITION AND TO DETERMINE THE LOCATION OF THE PROPOSED SITE IMPROVEMENTS.
2. THE OWNER RESERVES THE RIGHT TO REVIEW ALL MATERIALS DESIGNATED FOR REMOVAL AND TO RETAIN OWNERSHIP OF SUCH MATERIALS. IF THE OWNER RETAINS ANY MATERIAL THE CONTRACTOR SHALL MAKE ARRANGEMENTS WITH THE OWNER TO HAVE THOSE MATERIALS REMOVED OFF SITE AT NO ADDITIONAL COST.
3. UNLESS SPECIFICALLY NOTED TO BE REMOVED / STOCKPILED (R&S) OR REMOVE/ RESET (R&R), ALL SITE FEATURES CALLED FOR REMOVAL SHALL BE REMOVED COMPLETELY WITH THEIR FOOTINGS, ATTACHMENTS, BASE MATERIAL, CONDUITS, WIRES, DRAIN LINES, UTILITY CONNECTIONS ETC., TRANSPORTED FROM THE SITE TO BE DISPOSED OF IN A LAWFUL MANNER AT AN ACCEPTABLE DISPOSAL SITE AND AT NO ADDITIONAL COST TO THE OWNER.
4. ALL EXISTING SITE FEATURES TO REMAIN SHALL BE PROTECTED THROUGHOUT THE CONSTRUCTION PERIOD. ANY FEATURES DAMAGED DURING CONSTRUCTION OPERATIONS SHALL BE REPAIRED OR REPLACED TO THE SATISFACTION OF THE OWNER'S REPRESENTATIVE AT NO ADDITIONAL COST.
5. DURING EARTHWORK OPERATIONS, CONTRACTOR SHALL TAKE CARE TO NOT DISTURB EXISTING MATERIALS TO REMAIN, OUTSIDE THE LIMITS OF EXCAVATION AND BACKFILL AND SHALL TAKE WHATEVER MEASURES NECESSARY, AT THE CONTRACTOR'S EXPENSE, TO PREVENT ANY EXCAVATED MATERIAL FROM COLLAPSING. ALL BACKFILL MATERIALS SHALL BE PLACED AND COMPACTED AS SPECIFIED TO THE SUBGRADE REQUIRED FOR THE INSTALLATION OF THE REMAINDER OF THE CONTRACT WORK.
6. IT SHALL BE THE CONTRACTOR'S OPTION, WITH CONCURRENCE OF THE OWNER, TO REUSE EXISTING GRAVEL IF IT MEETS THE REQUIREMENTS OF THE SPECIFICATIONS FOR COMMON GRAVEL BORROW FILL MATERIAL.
7. CLEAR AND GRUB VEGETATION' SHALL INCLUDE REMOVAL OF GRASS, SHRUBS, AND UNDERBRUSH, REMOVAL OF ROOTS, ROUGH GRADING, (INSTALLATION OF LOAM IF APPLICABLE), FINE GRADING, SEEDING AND TURF ESTABLISHMENT BY THE CONTRACTOR.
8. TREES DESIGNATED FOR REMOVAL SHALL BE TAGGED BY CONTRACTOR AND APPROVED BY OWNER'S REPRESENTATIVE PRIOR TO COMMENCEMENT OF REMOVAL.
9. THE STORAGE OF MATERIALS AND EQUIPMENT WILL BE PERMITTED AT LOCATIONS DESIGNATED BY OWNER OR OWNER'S REPRESENTATIVE. PROTECTION OF STORED MATERIALS AND EQUIPMENT SHALL BE THE SOLE RESPONSIBILITY OF THE CONTRACTOR.
10. THE CONTRACTOR SHALL PROTECT EXISTING TREES TO REMAIN, CONTRACTOR SHALL INSTALL TREE PROTECTION BARRIER AFTER CLEARING UNDERBRUSH, TURF, AND TOPSOIL, AND TAKE DUE CARE TO PREVENT INJURY TO TREES DURING CLEARING OPERATIONS.
11. CONTRACTOR SHALL TAKE EXTREME CARE WHEN PERFORMING DEMOLITION AND CONSTRUCTION ACTIVITIES WITHIN THE CRITICAL ROOT ZONES OF THE EXISTING TREES TO REMAIN. CONTRACTOR SHALL CLEAN CUT ANY ROOTS OVER 2" DIA. THAT ARE EFFECTED BY THE SCOPE OF WORK. CONTRACTOR SHALL CONSULT TOWN ARBORIST AND OWNER'S REPRESENTATIVE PRIOR TO ANY ROOT REMOVAL. ALL WORK WITHIN THE ROOT ZONE SHALL BE PERFORMED BY HAND OR LIGHT EQUIPMENT APPROVED BY ARBORIST AND OWNER'S REPRESENTATIVE.
12. COORDINATE REUSE AND RELOCATION OF ROADWAY, PARKING, AND SIDEWALK SIGNAGE WITH TOWN AND OWNER'S REPRESENTATIVE.
13. CONTRACTOR SHALL COORDINATE ALL SIDEWALK DEMOLITION AND CONSTRUCTION WITHIN DESIGNATED TIME PERIODS, AS IDENTIFIED ON THE PHASING PLAN, WITH THE HIGH SCHOOL CONSTRUCTION CONTRACTOR TO PROVIDE UNOBSTRUCTED SIDEWALK ACCESS FOR STUDENTS AND PEDESTRIANS THROUGHOUT THE DURATION OF CONSTRUCTION. CONTRACTOR SHALL ADJUST LOCATION OF CONSTRUCTION FENCE AS REQUIRED TO PERFORM ALL WORK WITHIN LIMITS OF PROPOSED SIDEWALK AREAS.

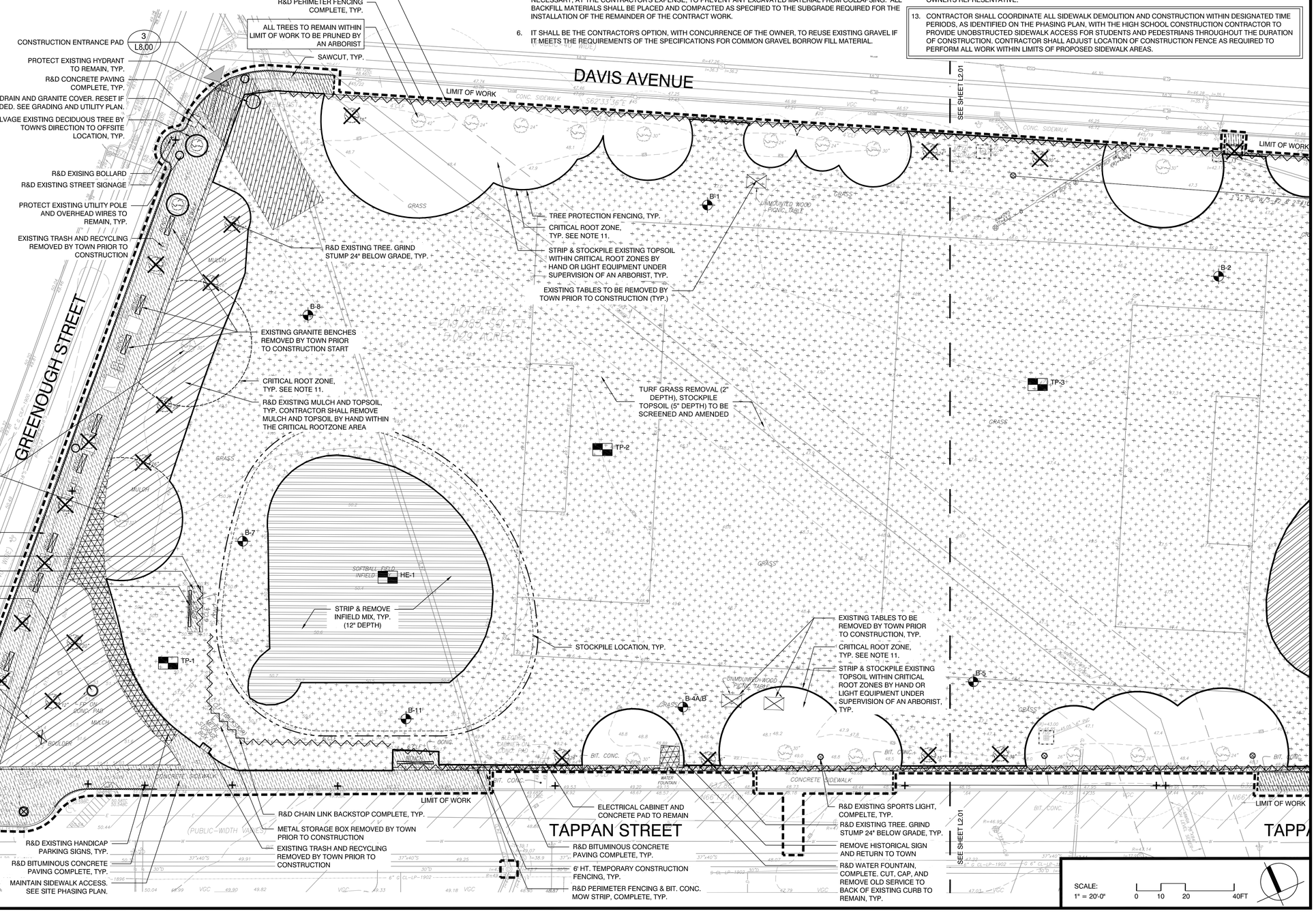

Project:

TOWN OF BROOKLINE, MA

CYPRESS STREET PLAYGROUND

Weston & Sampson

85 Devonshire Street,
3rd Floor, Boston, MA 02109
617.412.4480 800.SAMPSON
www.westonandsampson.com

Consultants:

Revisions:

No.	Date	Description

Seal:

Issued For:

BIDDING DOCUMENTS

Scale:	AS SHOWN
Date:	MAY 26, 2020
Drawn By:	LR, EB, HC
Reviewed By:	BMK
Approved By:	ERB
W&S Project No:	2190095
W&S File No:	

Drawing Title:

SITE DEMOLITION AND PREPARATION PLAN

Sheet Number:

L2.00

COPYRIGHT 2020 WESTON & SAMPSON

LEGEND

- LIMIT OF WORK
- MATCH LINE
- R&D BITUMINOUS CONCRETE PAVING, FULL DEPTH, COMPLETE
- R&D CONCRETE PAVING, FULL DEPTH COMPLETE
- STRIP & STOCKPILE EXISTING TOPSOIL (5" DEPTH)
- R&D EXISTING MULCH & TOPSOIL
- STRIP & REMOVE INFIELD MIX (12" DEPTH)
- STOCKPILE LOCATION, TYP.
- SILTATION FENCE AND EROSION CONTROLS
- 6' HT. TEMPORARY CONSTRUCTION FENCING, TYP.
- SAW CUT
- R&D FENCING, COMPLETE
- R&R CURB, TYP.
- R&D EXISTING TREE, TYP.
- R&R EXISTING TREE, TYP.
- PROTECT EXISTING STRUCTURE, TYP.
- R&D EXISTING BENCH, TYP.
- INLET SEDIMENTATION CONTROL
- REMOVE AND DISPOSE OF EXISTING BASKETBALL HOOP & POST, COMPLETE
- CONSTRUCTION ENTRANCE PAD
- CAP AND ABANDON DRAINAGE/UTILITY STRUCTURES
- R&D SPORTS/PEDESTRAIN LIGHT FIXTURES, CONDUITS, WIRES, COMPLETE, TYP.
- TREE PROTECTION, TYP.

R&D REMOVE & DISPOSE
R&S REMOVE & SALVAGE
R&R REMOVE & RESET

SITE DEMOLITION AND PREPARATION NOTES

REFER TO SHEET L.200 FOR SITE PREPARATION AND DEMOLITION NOTES

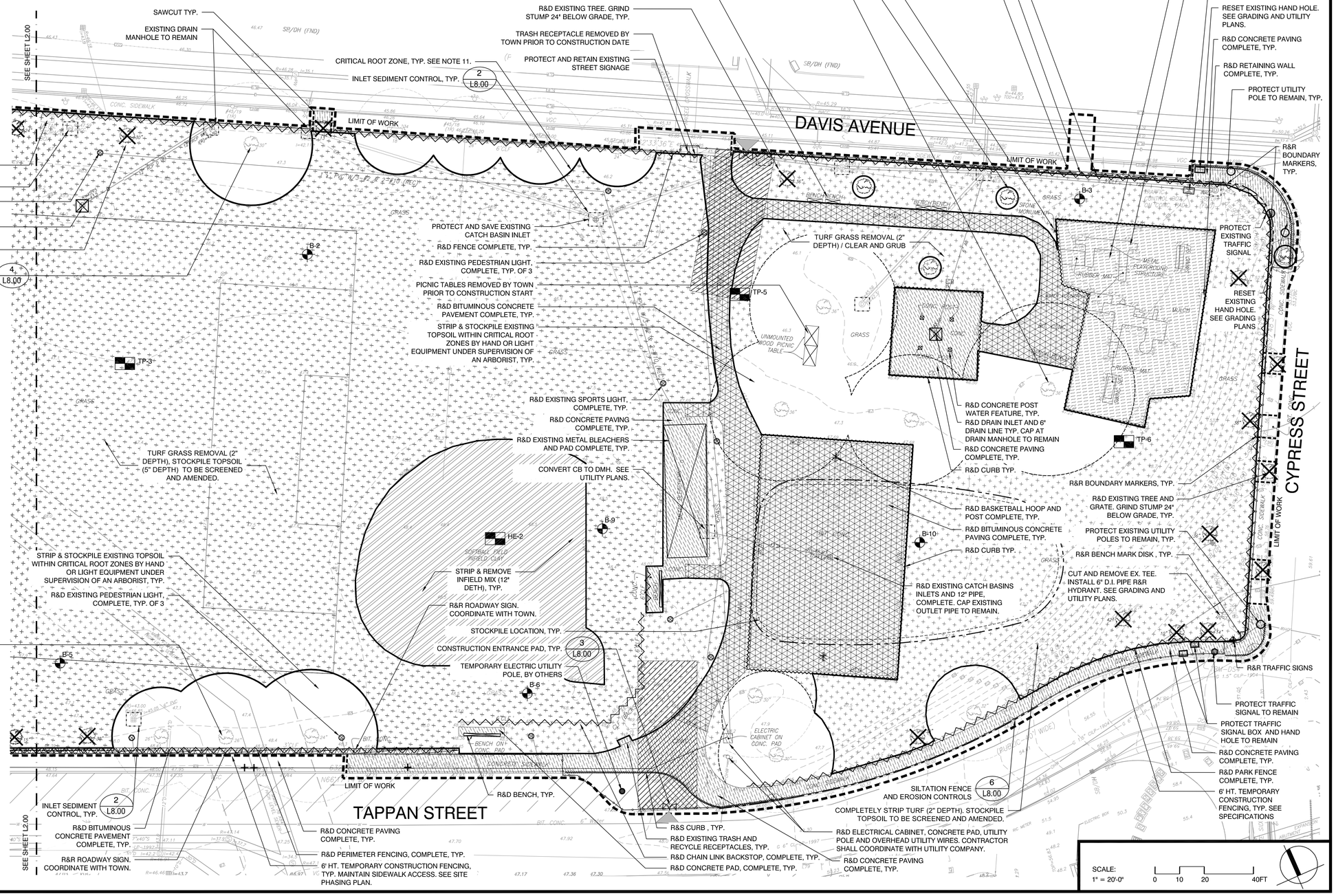

Project:

TOWN OF BROOKLINE, MA

CYPRESS STREET PLAYGROUND

Weston & Sampson

85 Devonshire Street,
3rd Floor, Boston, MA 02109
617.412.4480 800.SAMPSON
www.westonandsampson.com

Consultants:

Revisions:

No.	Date	Description

Seal:

Issued For:

BIDDING DOCUMENTS

Scale:	AS SHOWN
Date:	MAY 26, 2020
Drawn By:	LR, EB, HC
Reviewed By:	BMK
Approved By:	ERB
W&S Project No:	2190095
W&S File No:	

Drawing Title:

SITE DEMOLITION AND PREPARATION PLAN

Sheet Number:

L2.01

COPYRIGHT 2020 WESTON & SAMPSON

LEGEND

- LIMIT OF WORK
- MATCH LINE
- ENLARGEMENT PLAN
- CONCRETE PAVEMENT, TYP.
- POROUS PRECAST CONCRETE PAVERS - 2 COLORS, TYP.
- PINE BARK MULCH, TYP.
- PLANTING AREA, TYP. SEE PLANTING PLANS
- BVCL FENCE, TYP. (BLACK VINYL CHAIN LINK FENCE)
- POURED-IN-PLACE CONCRETE SEATWALL WITH COMPOSITE WOOD BENCH SEAT TOP, TYP.
- POURED-IN-PLACE CONCRETE SEATWALL WITH COMPOSITE WOOD BENCH SEAT TOP AND SEAT BACK OPTION TYP.
- CAFE TABLE, TYP.
- TREE GRATE, TYP.
- CONSTRUCTION JOINT IN CONCRETE, TYP.
- SCORE JOINT, TYP.
- EXPANSION JOINT, TYP.
- STONE MASONRY WALL / SEAT
- PEDESTRIAN LIGHT, TYP.
- SPORTS LIGHT, TYP.
- BIKE RACK, SEE SPECIFICATIONS
- TRASH AND RECYCLE RECEPTACLES, TYP. SEE NOTE 11.
- DRINKING FOUNTAIN, TYP. SEE SPECIFICATIONS

EX.	EXISTING
TYP.	TYPICAL
CONC.	CONCRETE
SPECS.	SPECIFICATIONS
BIT. CONC.	BITUMINOUS CONCRETE
BVCL	BLACK VINYL CHAIN LINK FENCE

MATERIALS NOTES

1. REFER TO EXISTING CONDITIONS PLANS FOR SURVEY INFORMATION.
2. REFER TO PLANTING PLAN FOR PLANT TYPES AND LOCATIONS.
3. COORDINATE ALL LAYOUT ACTIVITIES WITH THE SCOPE OF WORK CALLED FOR BY DEMOLITION, GRADING AND UTILITIES OPERATIONS ENCOMPASSED BY THIS CONTRACT. SET, PROTECT AND REPLACE REFERENCE STAKES AS NECESSARY OR AS REQUIRED BY THE OWNER'S REPRESENTATIVE.
4. ALL WORK SHALL BE PERFORMED BY CONTRACTOR UNLESS SPECIFICALLY INDICATED THAT THE WORK WILL BE PERFORMED "BY OTHERS" OR "UNDER SEPARATE CONTRACT".
5. THE CONTRACTOR SHALL BE RESPONSIBLE FOR FIELD MEASUREMENT OF ALL PROPOSED FENCES AND GATES.
6. THE DEPTH OF TOPSOIL LOAM FOR ALL PROPOSED LAWN AREAS SHALL BE 4" MINIMUM. ALL DISTURBED AREAS SHALL BE RESTORED WITH LOAM AND SEED UNLESS OTHERWISE NOTED
7. ALL REFERENCES TO ROOT ZONE MIX AND SEED SHALL BE AS SPECIFIED.
8. REFER TO DETAIL DRAWINGS FOR CONSTRUCTION DETAILS.
9. ALL REFERENCES TO LOAM AND SEED REFER TO HYDROMULCH SEEDED LAWN.
10. ALL LOCATIONS WHERE POURED-IN-PLACE RUBBER SAFETY SURFACING MEETS PLANTED VEGETATION, BITUMINOUS CONCRETE OR CONCRETE PAVERS SHALL HAVE A CONCRETE MOWSTRIP BETWEEN SURFACES AS DETAILED.
11. CONTRACTOR SHALL PROVIDE ONLY CONCRETE SLABS AT EACH LOCATION IDENTIFIED ON PLANS AS 'TRASH AND RECYCLING RECEPTACLES.' TOWN WILL INSTALL RECEPTACLES UNDER SEPARATE CONTRACT.
12. STREET SIGNS WILL BE FURNISHED AND INSTALLED BY TOWN. CONTRACTOR SHALL INSTALL BASES AS DIRECTED.

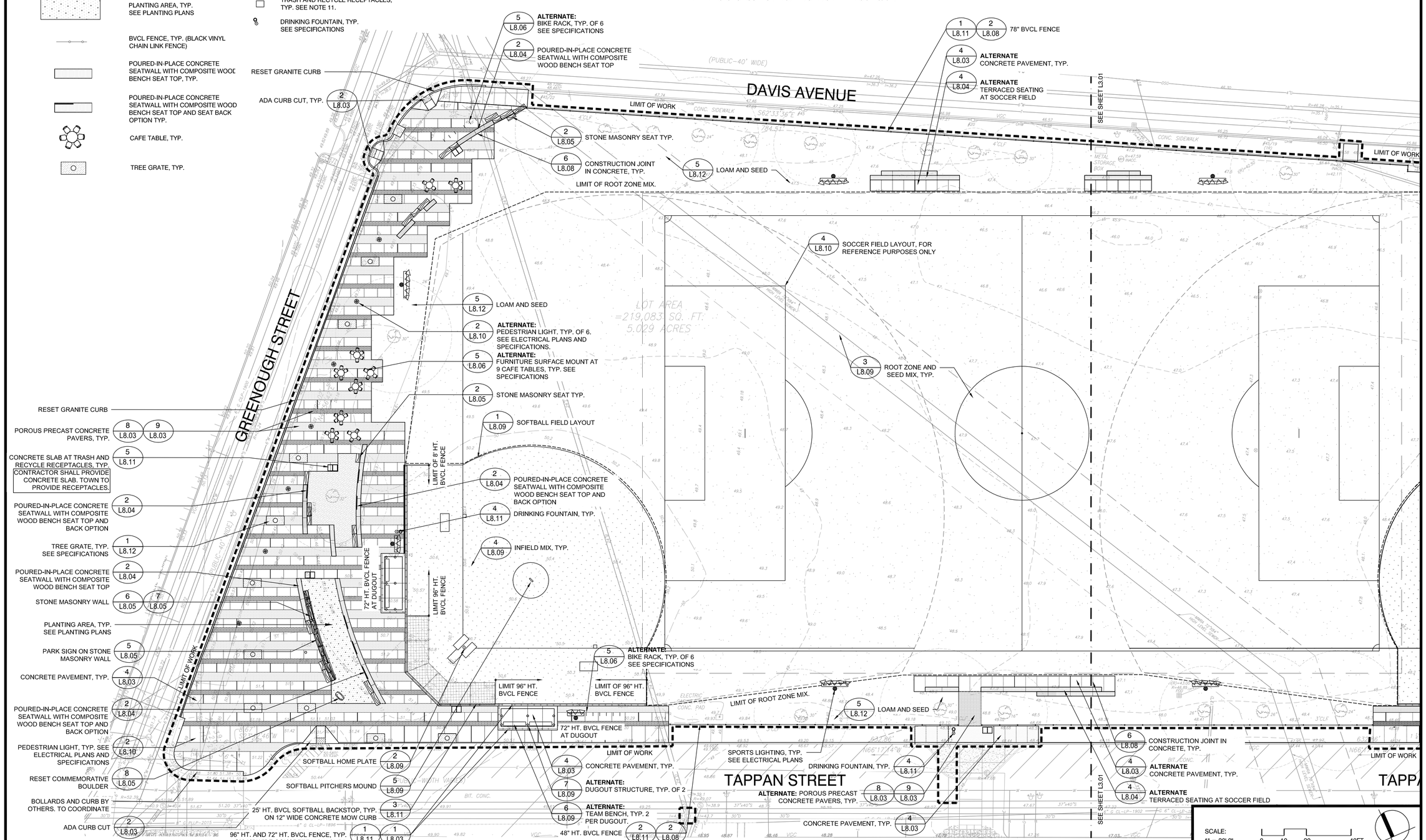

Project:

TOWN OF BROOKLINE, MA

CYPRESS STREET PLAYGROUND

Weston & Sampson

85 Devonshire Street,
3rd Floor, Boston, MA 02109
617.412.4480 800.SAMPSON
www.westonandsampson.com

Consultants:

Revisions:

No.	Date	Description

Seal:

Issued For:

BIDDING DOCUMENTS

Scale:	AS SHOWN
Date:	MAY 26, 2020
Drawn By:	LR, EB, HC
Reviewed By:	BMK
Approved By:	ERB
W&S Project No:	2190095
W&S File No:	

Drawing Title:

MATERIALS PLAN

Sheet Number:

L3.00

COPYRIGHT 2020 WESTON & SAMPSON

LEGEND

- LIMIT OF WORK
- MATCH LINE
- ENLARGEMENT PLAN
- CONCRETE PAVEMENT, TYP.
- BITUMINOUS CONCRETE PAVEMENT WITH COLOR SEALCOAT, TYP.
- POURED-IN-PLACE RUBBER SAFETY SURFACING - 3 COLORS, TYP.
- WOOD FIBER MULCH
- POROUS PRECAST CONCRETE PAVERS - 2 COLORS, TYP.
- PLANTING AREA, TYP. SEE PLANTING PLANS
- GRANITE COBBLESTONE PAVERS, TYP.
- COMPOSITE WOOD DECK, TYP.
- BVCL FENCE, TYP. (BLACK VINYL CHAIN LINK FENCE)
- POURED-IN-PLACE CONCRETE SEATWALL WITH COMPOSITE WOOD BENCH SEAT TOP, TYP.
- POURED-IN-PLACE CONCRETE SEATWALL WITH COMPOSITE WOOD BENCH SEAT TOP AND SEAT BACK OPTION TYP.
- CAFE TABLE, TYP.
- PICNIC TABLE, TYP.
- TREE GRATE, TYP.
- SCULPTURAL BENCH, TYP.
- CONSTRUCTION JOINT IN CONCRETE, TYP.
- SCORE JOINT, TYP.
- EXPANSION JOINT, TYP.
- POURED-IN-PLACE CONCRETE WALL
- STONE MASONRY WALL / SEAT
- PEDESTRIAN LIGHT, TYP.
- SPORTS LIGHT, TYP.
- BIKE RACK, SEE SPECIFICATIONS
- TRASH AND RECYCLE RECEPTACLES, TYP. SEE NOTE 11.
- DRINKING FOUNTAIN, TYP. SEE SPECIFICATIONS

EX.	EXISTING
TYP.	TYPICAL
CONC.	CONCRETE
SPECS.	SPECIFICATIONS
BIT. CONC.	BITUMINOUS CONCRETE
BVCL	BLACK VINYL CHAIN LINK FENCE

MATERIAL NOTES

REFER TO SHEET L3.00 FOR MATERIAL NOTES

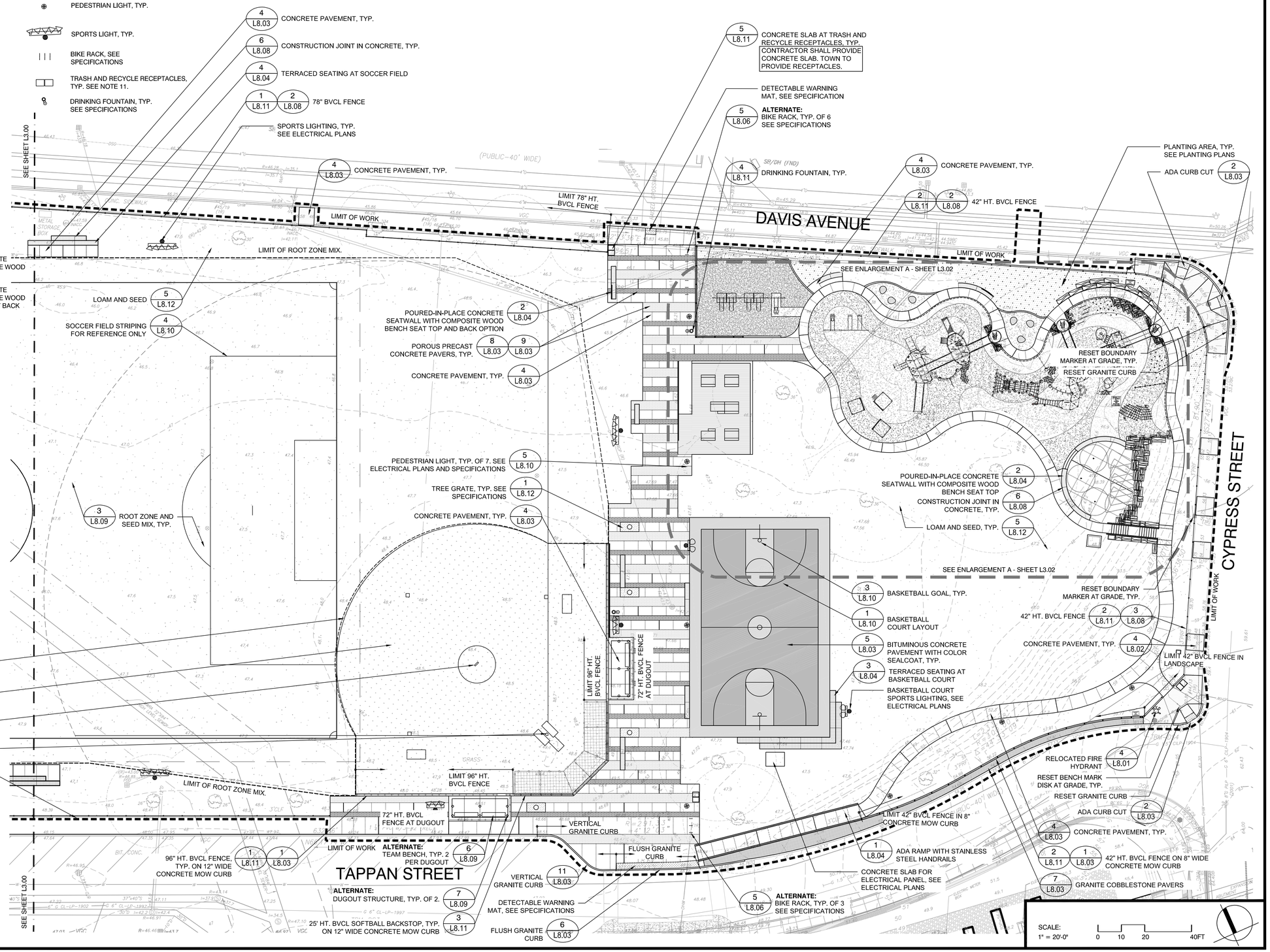

Project:

TOWN OF BROOKLINE, MA

CYPRESS STREET PLAYGROUND

Weston & Sampson

85 Devonshire Street,
3rd Floor, Boston, MA 02109
617.412.4480 800.SAMPSON
www.westonandsampson.com

Consultants:

Revisions:

No.	Date	Description

Seal:

Issued For:

BIDDING DOCUMENTS

Scale:	AS SHOWN
Date:	MAY 26, 2020
Drawn By:	LR, EB, HC
Reviewed By:	BMK
Approved By:	ERB
W&S Project No:	2190095
W&S File No:	

Drawing Title:

MATERIALS PLAN

Sheet Number:

L3.01

COPYRIGHT 2020 WESTON & SAMPSON

LEGEND

- LIMIT OF WORK
- CONCRETE PAVEMENT, TYP.
- BITUMINOUS CONCRETE PAVEMENT WITH COLOR SEALCOAT, TYP.
- POURED-IN-PLACE RUBBER SAFETY SURFACING - 3 COLORS, TYP.
- WOOD FIBER MULCH
- POROUS PRECAST CONCRETE PAVERS - 2 COLORS, TYP.
- PLANTING AREA, TYP. SEE PLANTING PLANS
- GRANITE COBBLESTONE PAVERS, TYP.
- COMPOSITE WOOD DECK, TYP.
- POURED-IN-PLACE CONCRETE SEATWALL WITH COMPOSITE WOOD BENCH SEAT TOP, TYP.
- POURED-IN-PLACE CONCRETE SEATWALL WITH COMPOSITE WOOD BENCH SEAT TOP AND SEAT BACK OPTION TYP.
- PICNIC TABLE, TYP.
- SCULPTURAL BENCH, TYP.
- CONSTRUCTION JOINT IN CONCRETE, TYP.
- SCORE JOINT, TYP.
- EXPANSION JOINT, TYP.
- CAST-IN-PLACE CONCRETE WALL
- STONE MASONRY WALL
- PEDESTRIAN LIGHT, TYP.
- SPORTS LIGHT, TYP.
- BIKE RACK SEE SPECIFICATIONS
- TRASH AND RECYCLE RECEPTACLES, TYP. SEE NOTE 11.
- DRINKING FOUNTAIN, SEE SPECIFICATIONS

EX.	EXISTING
TYP.	TYPICAL
CONC.	CONCRETE
SPECS.	SPECIFICATIONS
BIT. CONC.	BITUMINOUS CONCRETE
BVCL	BLACK VINYL CHAIN LINK FENCE

MATERIAL NOTES

REFER TO SHEET L3.00 FOR MATERIAL NOTES

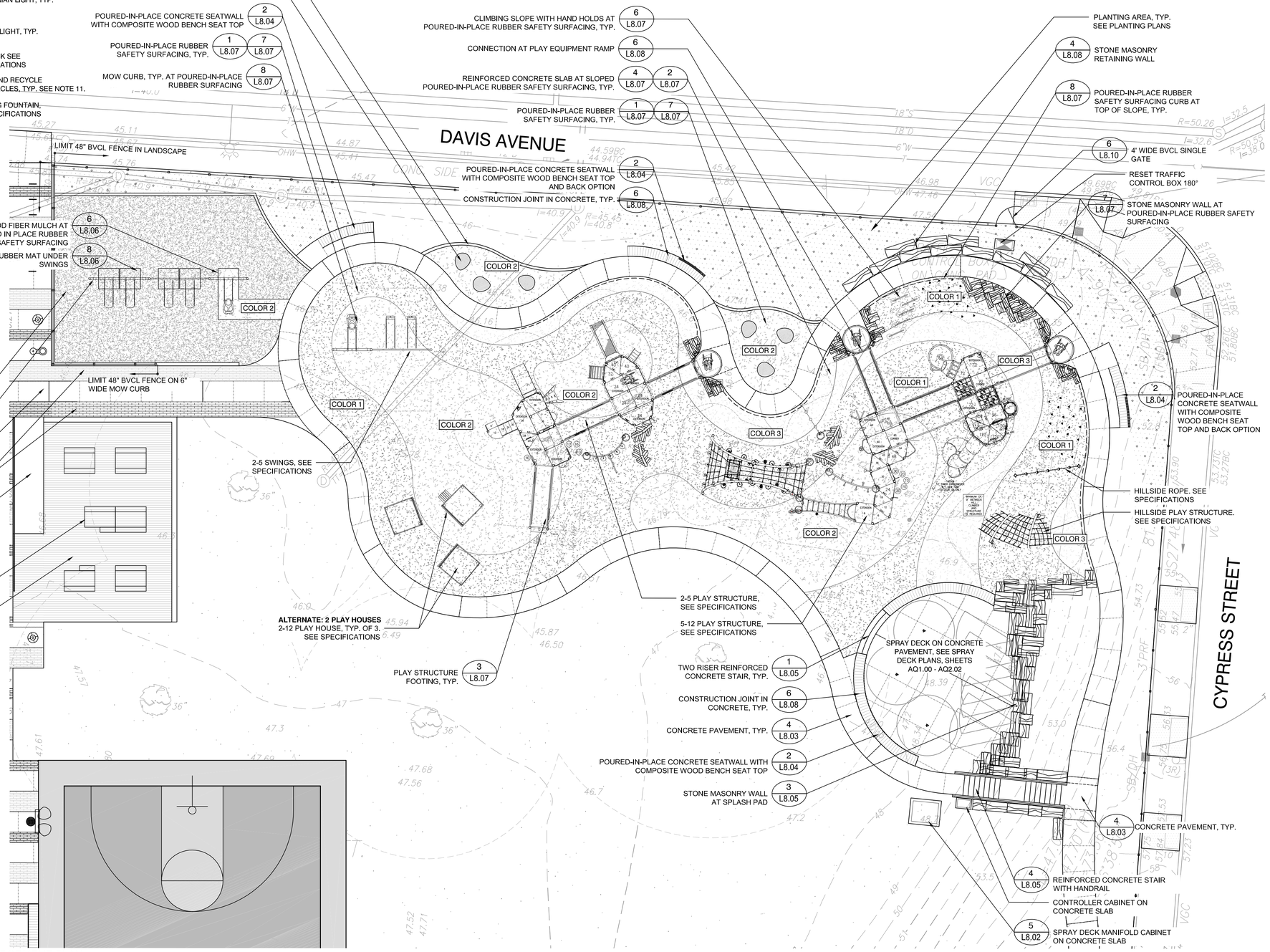

A PLAYGROUND ENLARGEMENT PLAN

SCALE: 1" = 10' - 0"

SCALE: 1" = 10'-0" 0 5 10 20FT

Project:

TOWN OF BROOKLINE, MA

CYPRESS STREET PLAYGROUND

Weston & Sampson

85 Devonshire Street, 3rd Floor, Boston, MA 02109
617.412.4480 800.SAMPSON
www.westonandsampson.com

Consultants:

Revisions:

No.	Date	Description

Seal:

Issued For:

BIDDING DOCUMENTS

Scale:	AS SHOWN
Date:	MAY 26, 2020
Drawn By:	LR, EB, HC
Reviewed By:	BMK
Approved By:	ERB
W&S Project No:	2190095
W&S File No:	

Drawing Title:

MATERIALS PLAN ENLARGEMENTS

Sheet Number:

L3.02

COPYRIGHT 2020 WESTON & SAMPSON

LEGEND

- LIMIT OF WORK
- MATCH LINE
- ENLARGEMENT PLAN
- XX' — TYP. DIMENSION
- X'-X' — TYP. ARC DIMENSION
- XX° — TYP. ANGLE DIMENSION
- P.O.B #1 — POINT OF BEGINNING
- PCC — POINT OF COMPOUND CURVE
- MID — MIDDLE OF CURVE
- PRC — POINT OF RETURN CURVE
- C1 — CURVE NUMBER
- L1 — LINE NUMBER
- PT — POINT OF TANGENT
- (A) — POROUS PRECAST CONCRETE PAVER- COLOR 1
- (B) — POROUS PRECAST CONCRETE PAVER- COLOR 2
- (C) — CONCRETE PAVEMENT, TYP.

LAYOUT NOTES

1. COORDINATE ALL LAYOUT ACTIVITIES WITH THE SCOPE OF WORK CALLED FOR BY DEMOLITION, GRADING AND UTILITIES OPERATIONS ENCOMPASSED BY THIS CONTRACT. SET, PROTECT AND REPLACE REFERENCE STAKES AS NECESSARY OR AS REQUIRED BY THE OWNER'S REPRESENTATIVE.
2. ALL WORK SHALL BE PERFORMED BY CONTRACTOR UNLESS SPECIFICALLY INDICATED THAT THE WORK WILL BE PERFORMED BY TOWN OF BROOKLINE.
3. THE LAYOUT OF SITE AMENITIES AND FENCES MUST BE APPROVED BY THE OWNER'S REPRESENTATIVE PRIOR TO INSTALLATION.
4. ALL PROPOSED SITE FEATURES SHALL BE LAID OUT AND STAKED FOR REVIEW AND APPROVAL BY THE OWNER'S REPRESENTATIVE PRIOR TO COMMENCEMENT OF INSTALLATION. ANY REQUIRED ADJUSTMENTS TO THE LAYOUT SHALL BE UNDERTAKEN AS DIRECTED, AT NO ADDITIONAL COST TO THE OWNER. ALL LAYOUT SHALL BE PERFORMED BY A MA. REGISTERED PROFESSIONAL LAND SURVEYOR.
5. ALL PROPOSED PAVEMENTS SHALL MEET THE LINE AND GRADE OF EXISTING ADJACENT PAVEMENT SURFACES AND ALL SAWCUT EDGES WHERE PROPOSED PAVEMENT MEETS EXISTING PAVEMENT. ALL BITUMINOUS CONCRETE SHALL BE TREATED WITH AN RS-1 TACK COAT AT POINT OF CONNECTION. ALL PATHWAY WIDTHS SHALL BE AS NOTED ON THE LAYOUT PLANS.
6. THE CONTRACTOR SHALL VERIFY ALL DIMENSIONS AND GRADES ON THE GROUND AND REPORT ANY DISCREPANCIES IMMEDIATELY TO THE OWNER'S REPRESENTATIVE.
7. THE CONTRACTOR SHALL BE RESPONSIBLE FOR FIELD MEASUREMENTS OF ALL PROPOSED FENCES.
8. REFER TO DETAIL DRAWINGS FOR SITE CONSTRUCTION DETAILS.
9. TO FACILITATE LAYOUT OF PROPOSED SITE FEATURES, LAYOUT INFORMATION FOR CERTAIN WORK, WHICH IS NOT INCLUDED WITHIN THE SCOPE OF THIS CONTRACT HAS BEEN PROVIDED ON THE LAYOUT AND MATERIALS PLAN FOR INFORMATION ONLY. SOME ITEMS ARE "NOT IN CONTRACT" (NIC) AND SHOWN FOR REFERENCE ONLY.
10. ALL LAYOUT LINES, OFFSETS, OR REFERENCES TO LOCATING OBJECTS ARE EITHER PARALLEL OR PERPENDICULAR UNLESS OTHERWISE DESIGNATED WITH ANGLE OFFSETS NOTED.

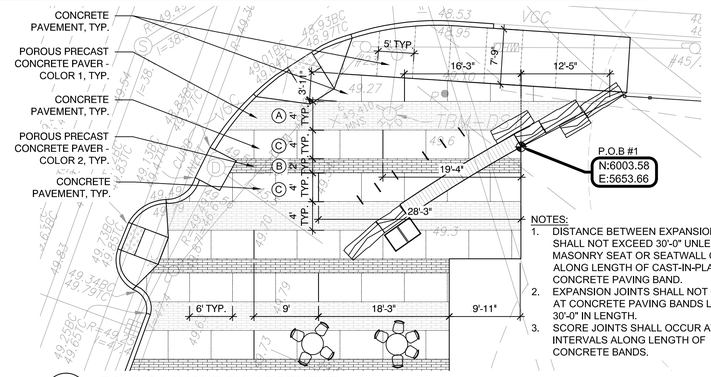

NOTES:

1. DISTANCE BETWEEN EXPANSION JOINTS SHALL NOT EXCEED 30'-0" UNLESS STONE MASONRY SEAT OR SEATWALL OCCURS ALONG LENGTH OF CAST-IN-PLACE CONCRETE PAVING BAND.
2. EXPANSION JOINTS SHALL NOT OCCUR AT CONCRETE PAVING BANDS LESS THAN 30'-0" IN LENGTH.
3. SCORE JOINTS SHALL OCCUR AT 6'-0" INTERVALS ALONG LENGTH OF CONCRETE BANDS.

A PAVING LAYOUT ENLARGEMENT

SCALE: 1" = 8' - 0"

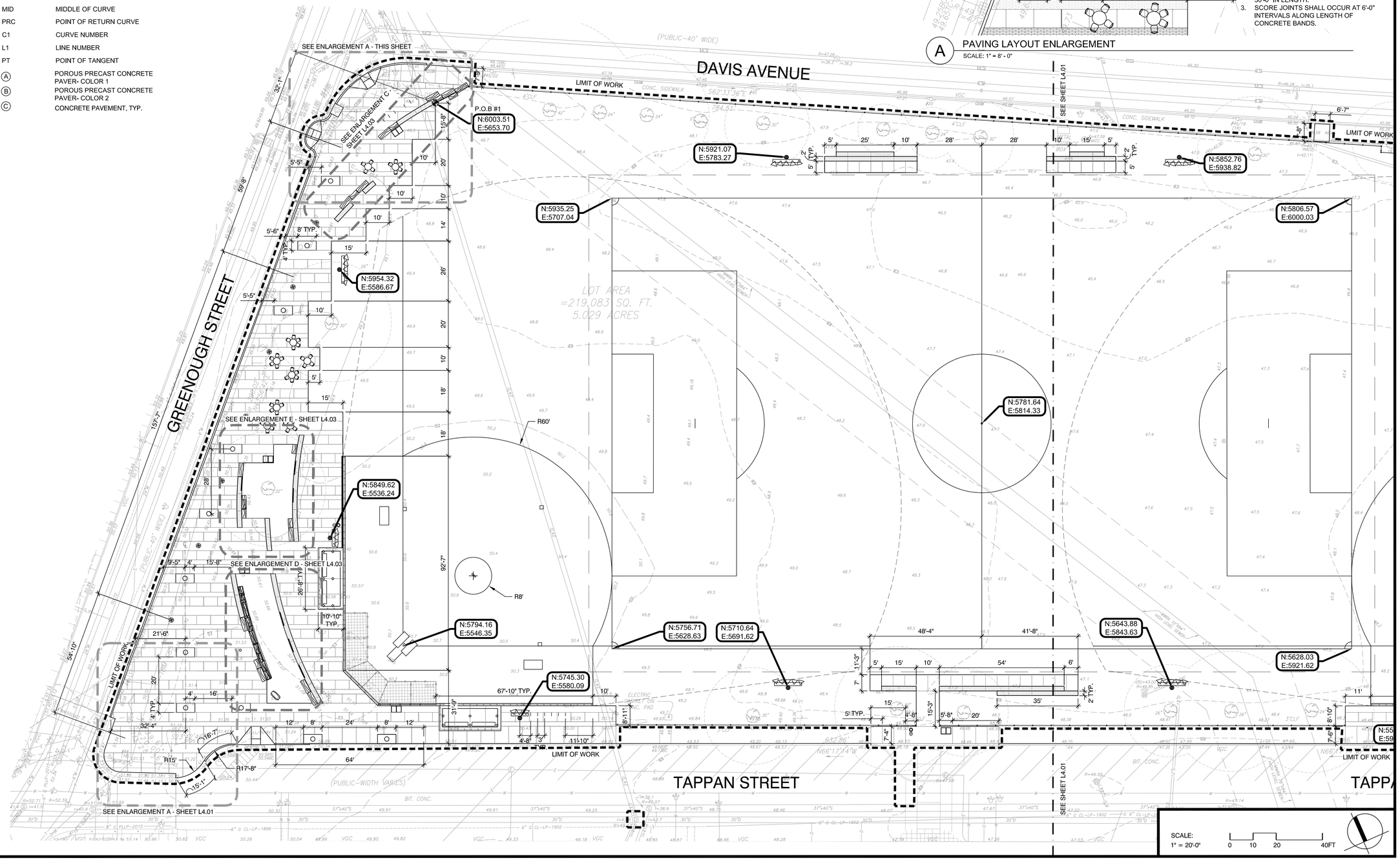

SCALE:
1" = 20'-0"
0 10 20 40FT

Project:

TOWN OF BROOKLINE, MA

CYPRESS STREET PLAYGROUND

Weston & Sampson

85 Devonshire Street,
3rd Floor, Boston, MA 02109
617.412.4480 800.SAMPSON
www.westonandsampson.com

Consultants:

Revisions:

No.	Date	Description

Seal:

Issued For:

BIDDING DOCUMENTS

Scale:	AS SHOWN
Date:	MAY 26, 2020
Drawn By:	LR, EB, HC
Reviewed By:	BMK
Approved By:	ERB
W&S Project No:	2190095
W&S File No:	

Drawing Title:

LAYOUT PLAN

Sheet Number:

L4.00

COPYRIGHT 2020 WESTON & SAMPSON

LEGEND

- LIMIT OF WORK
- MATCH LINE
- ENLARGEMENT PLAN
- XX' — TYP. DIMENSION
- X'-X' — TYP. ARC DIMENSION
- XX° — TYP. ANGLE DIMENSION
- P.O.B #1 — POINT OF BEGINNING
- PCC — POINT OF COMPOUND CURVE
- MID — MIDDLE OF CURVE
- PRC — POINT OF RETURN CURVE
- C1 — CURVE NUMBER
- L1 — LINE NUMBER
- PT — POINT OF TANGENT
- (A) — POROUS PRECAST CONCRETE PAVER- COLOR 1
- (B) — POROUS PRECAST CONCRETE PAVER- COLOR 2
- (C) — CONCRETE PAVEMENT, TYP.

LAYOUT NOTES

REFER TO SHEET L4.00 FOR LAYOUT NOTES

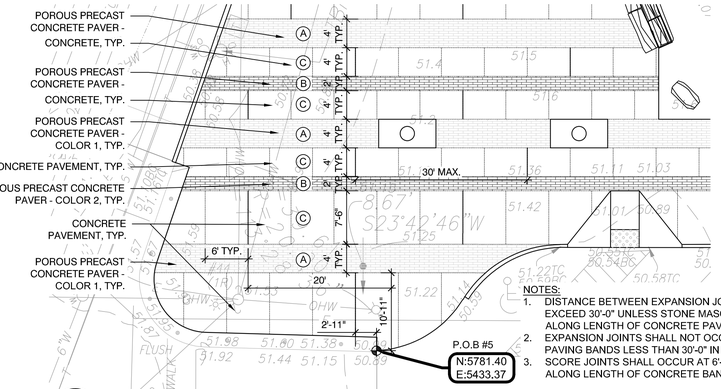

NOTES:
1. DISTANCE BETWEEN EXPANSION JOINTS SHALL NOT EXCEED 30'-0" UNLESS STONE MASONRY SEAT OCCURS ALONG LENGTH OF CONCRETE PAVING BAND.
2. EXPANSION JOINTS SHALL NOT OCCUR AT CONCRETE PAVING BANDS LESS THAN 30'-0" IN LENGTH.
3. SCORE JOINTS SHALL OCCUR AT 6'-0" INTERVALS ALONG LENGTH OF CONCRETE BANDS.

A PAVING LAYOUT ENLARGEMENT
SCALE: 1" = 10' - 0"

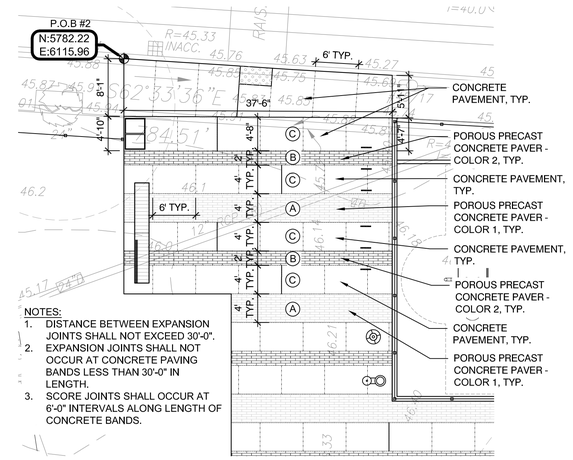

NOTES:
1. DISTANCE BETWEEN EXPANSION JOINTS SHALL NOT EXCEED 30'-0".
2. EXPANSION JOINTS SHALL NOT OCCUR AT CONCRETE PAVING BANDS LESS THAN 30'-0" IN LENGTH.
3. SCORE JOINTS SHALL OCCUR AT 6'-0" INTERVALS ALONG LENGTH OF CONCRETE BANDS.

B PAVING LAYOUT ENLARGEMENT
SCALE: 1" = 10' - 0"

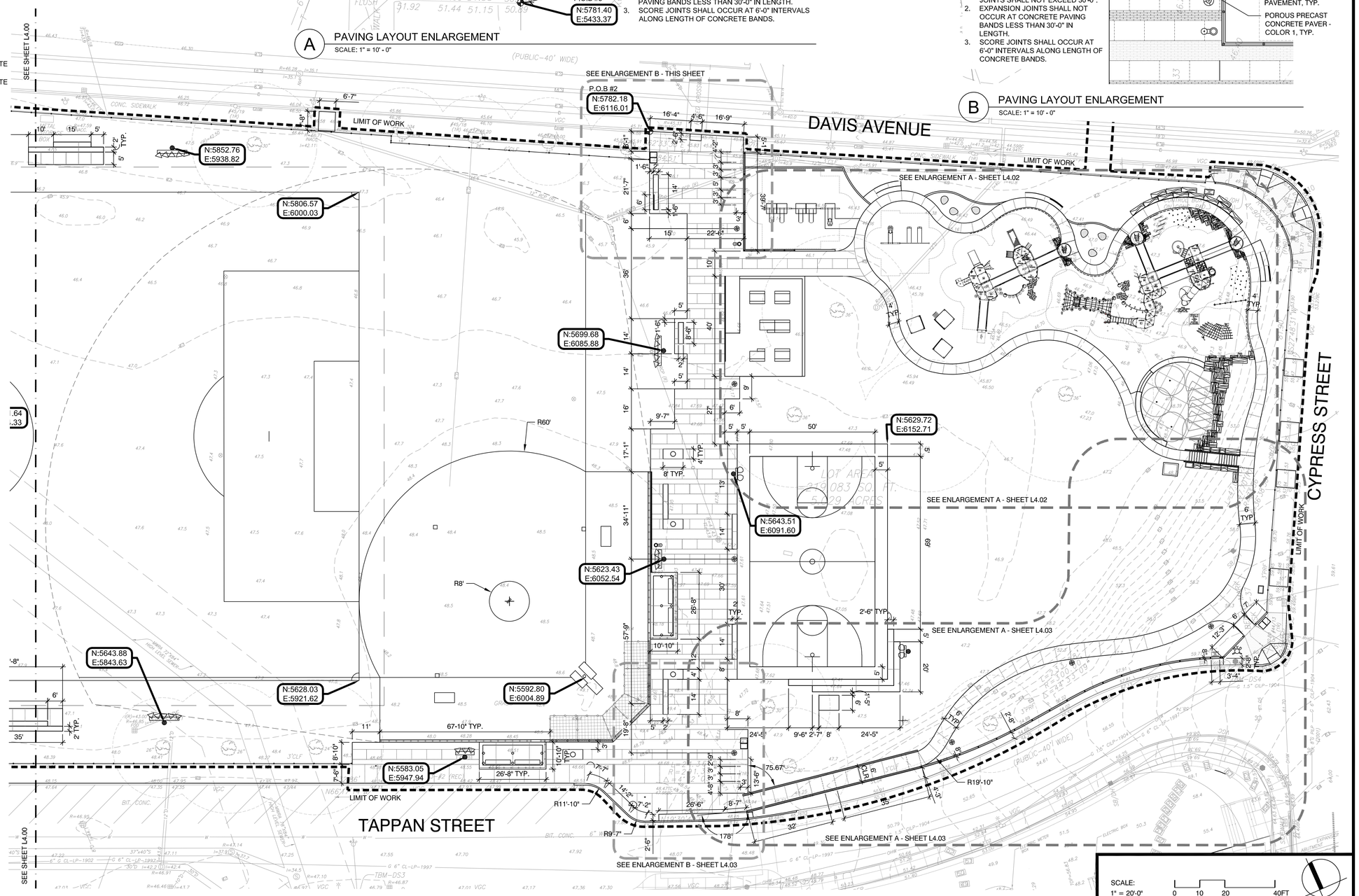

SCALE:
1" = 20'-0"
0 10 20 40FT

Project:
TOWN OF BROOKLINE, MA

CYPRESS STREET PLAYGROUND

Weston & Sampson
85 Devonshire Street,
3rd Floor, Boston, MA 02109
617.412.4480 800.SAMPSON
www.westonandsampson.com

Consultants:

Revisions:

No.	Date	Description

Seal:

Issued For:
BIDDING DOCUMENTS

Scale:	AS SHOWN
Date:	MAY 26, 2020
Drawn By:	LR, EB, HC
Reviewed By:	BMK
Approved By:	ERB
W&S Project No:	2190095
W&S File No:	

Drawing Title:
LAYOUT PLAN

Sheet Number:
L4.01

COPYRIGHT 2020 WESTON & SAMPSON

LEGEND

- LIMIT OF WORK
- MATCH LINE
- ENLARGEMENT PLAN
- XX' — TYP. DIMENSION
- X'-X' — TYP. ARC DIMENSION
- XX° — TYP. ANGLE DIMENSION
- P.O.B #1 — POINT OF BEGINNING
- PCC — POINT OF COMPOUND CURVE
- MID — MIDDLE OF CURVE
- PRC — POINT OF RETURN CURVE
- C1 — CURVE NUMBER
- L1 — LINE NUMBER
- PT — POINT OF TANGENT

LAYOUT NOTES

REFER TO SHEET L4.00 FOR LAYOUT NOTES

CURVE TABLE				
CURVE #	RADIUS	LENGTH	BEGIN	END
C1	31.5	3.2	N: 5565.5047 E: 6281.1775	N: 5568.2884 E: 6282.7443
C2	145.0	10.5	N: 5568.2884 E: 6282.7443	N: 5577.1326 E: 6288.4706
C3	147.0	10.0	N: 5577.1326 E: 6288.4706	N: 5585.0746 E: 6294.5571
C4	52.5	14.0	N: 5585.0746 E: 6294.5571	N: 5597.1070 E: 6301.7116
C5	31.0	9.7	N: 5597.1070 E: 6301.7116	N: 5606.5283 E: 6303.8453
C6	30.0	17.6	N: 5606.5283 E: 6303.8453	N: 5622.9385 E: 6309.5641
C7	35.0	33.2	N: 5622.9385 E: 6309.5641	N: 5654.6002 E: 6313.7636
C8	24.5	19.6	N: 5654.6002 E: 6313.7636	N: 5669.4931 E: 6301.8979
C9	29.0	23.6	N: 5669.4931 E: 6301.8979	N: 5671.5795 E: 6279.0494
C10	27.0	17.8	N: 5671.5795 E: 6279.0494	N: 5661.7867 E: 6264.5150
C11	7.0	10.5	N: 5661.7867 E: 6264.5150	N: 5660.8358 E: 6255.0065
C12	9.0	6.2	N: 5660.8358 E: 6255.0065	N: 5665.9360 E: 6251.6269
C13	23.0	8.9	N: 5665.9360 E: 6251.6269	N: 5674.8034 E: 6252.0631
C14	18.0	9.0	N: 5674.8034 E: 6252.0631	N: 5683.6999 E: 6252.1675
C15	17.0	17.1	N: 5683.6999 E: 6252.1675	N: 5696.0004 E: 6241.3795
C16	19.0	12.7	N: 5696.0004 E: 6241.3795	N: 5696.5961 E: 6228.8919
C17	42.0	4.7	N: 5696.5961 E: 6228.8919	N: 5695.4451 E: 6224.3764
C18	14.0	22.5	N: 5695.4451 E: 6224.3764	N: 5706.3834 E: 6207.4177
C19	16.0	23.9	N: 5706.3834 E: 6207.4177	N: 5719.2112 E: 6189.8935
C20	18.5	15.6	N: 5719.2112 E: 6189.8935	N: 5711.4837 E: 6176.8737
C21	21.0	22.8	N: 5711.4837 E: 6176.8737	N: 5689.8600 E: 6174.9408
C22	17.0	14.4	N: 5689.8600 E: 6174.9408	N: 5675.9337 E: 6175.6148
C23	22.0	26.4	N: 5675.9337 E: 6175.6148	N: 5651.5764 E: 6180.4188
C24	32.0	31.1	N: 5651.5764 E: 6180.4188	N: 5645.0256 E: 6209.5675
C25	28.0	33.1	N: 5645.0256 E: 6209.5675	N: 5635.6391 E: 6239.3396
C26	40.4	35.4	N: 5635.6391 E: 6239.3396	N: 5602.1492 E: 6246.5568
C27	22.0	26.8	N: 5602.1492 E: 6246.5568	N: 5579.1690 E: 6256.9157

LINE TABLE			
LINE #	LENGTH	BEGIN	END
L1	27.8	N: 5579.1690 E: 6256.916	N: 5565.5047 E: 6281.1775

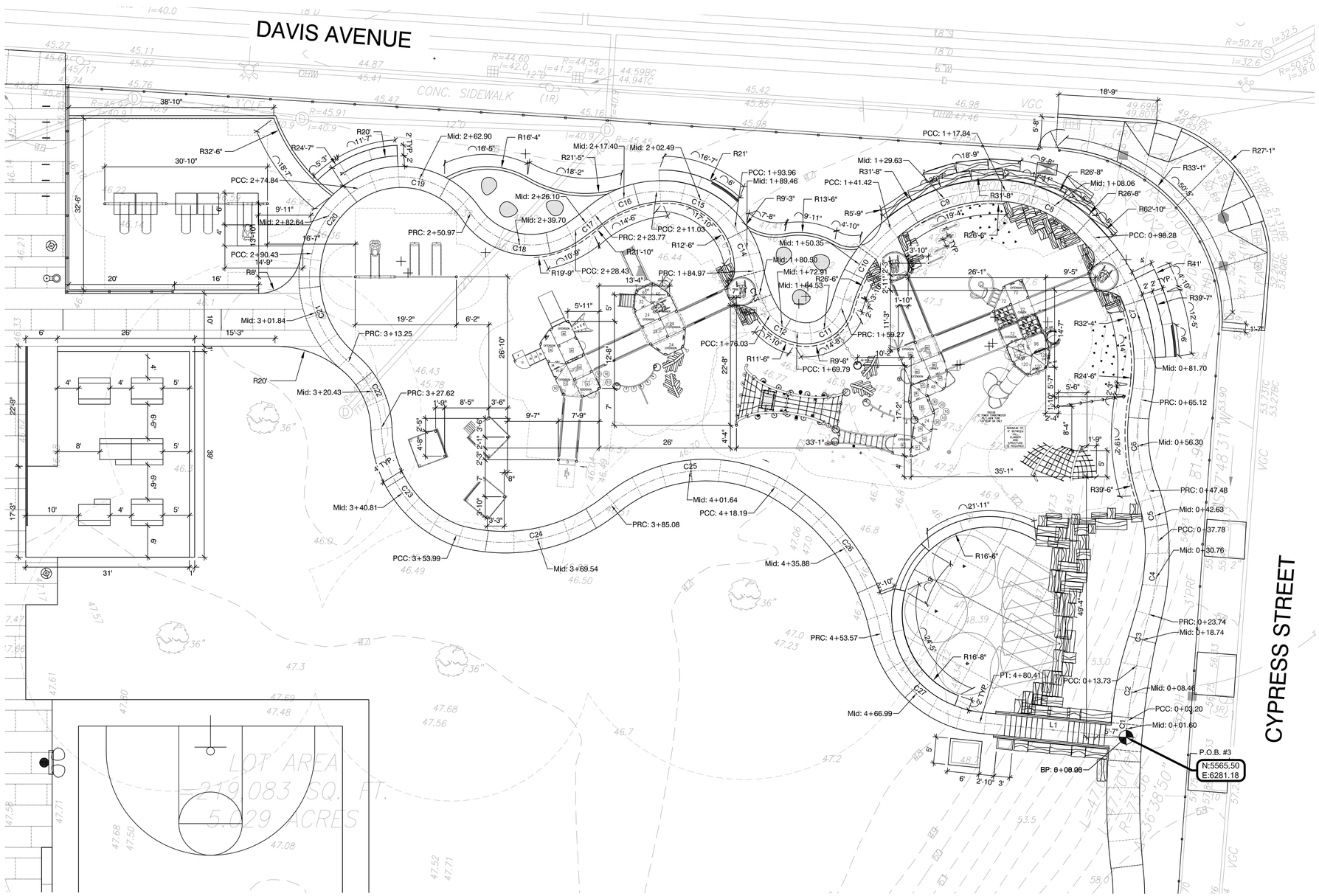

A PLAYGROUND ENLARGEMENT

SCALE: 1" = 10' - 0"

SCALE: 1" = 10'-0" 0 5 10 20FT

Project:

TOWN OF BROOKLINE, MA

CYPRESS STREET PLAYGROUND

Weston & Sampson

85 Devonshire Street,
3rd Floor, Boston, MA 02109
617.412.4480 800.SAMPSON
www.westonandsampson.com

Consultants:

Revisions:

No.	Date	Description

Seal:

Issued For:

BIDDING DOCUMENTS

Scale:	AS SHOWN
Date:	MAY 26, 2020
Drawn By:	LR, EB, HC
Reviewed By:	BMK
Approved By:	ERB
W&S Project No:	2190095
W&S File No:	

Drawing Title:

LAYOUT PLAN- PLAYGROUND

Sheet Number:

L4.02

COPYRIGHT 2020 WESTON & SAMPSON

LEGEND

- LIMIT OF WORK
- MATCH LINE
- ENLARGEMENT PLAN
- XX' — TYP. DIMENSION
- X'-X' — TYP. ARC DIMENSION
- XX° — TYP. ANGLE DIMENSION

LAYOUT NOTES

REFER TO SHEET L4.00 FOR LAYOUT NOTES

P.O.B #1	POINT OF BEGINNING
PCC	POINT OF COMPOUND CURVE
MID	MIDDLE OF CURVE
PRC	POINT OF RETURN CURVE
C1	CURVE NUMBER
L1	LINE NUMBER
PT	POINT OF TANGENT
A	POROUS PRECAST CONCRETE PAVER- COLOR 1
B	POROUS PRECAST CONCRETE PAVER- COLOR 2
C	CONCRETE PAVEMENT, TYP.

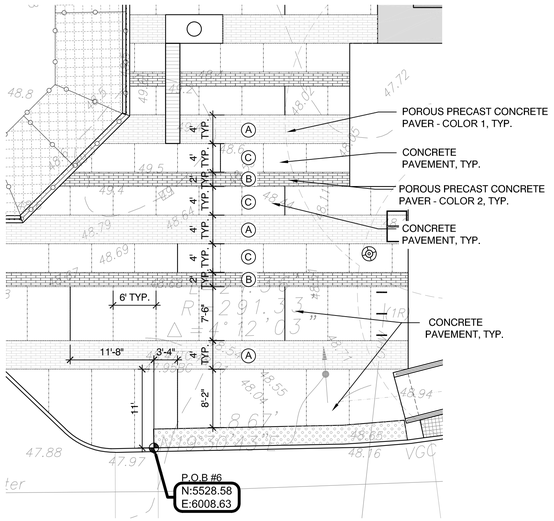

NOTES:
1. DISTANCE BETWEEN EXPANSION JOINTS SHALL NOT EXCEED 30'-0".
2. EXPANSION JOINTS SHALL NOT OCCUR AT CAST-IN-PLACE CONCRETE PAVING BANDS LESS THAN 30'-0" IN LENGTH.
3. SCORE JOINTS SHALL OCCUR AT 6'-0" INTERVALS ALONG LENGTH OF CAST-IN-PLACE CONCRETE BANDS.

B PAVING LAYOUT ENLARGEMENT
SCALE: 1" = 10' - 0"

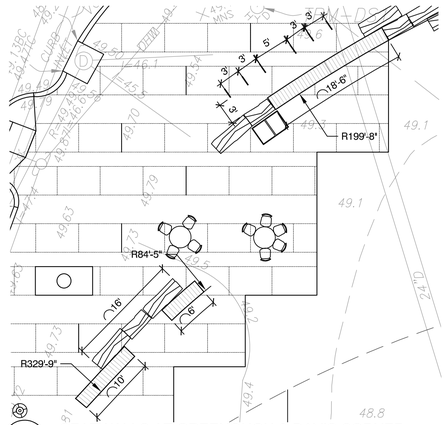

C SEATWALLS AT GREENOUGH & DAVIS CORNER
SCALE: 1" = 10' - 0"

E SEATWALLS AT EXISTING TREE
SCALE: 1" = 10' - 0"

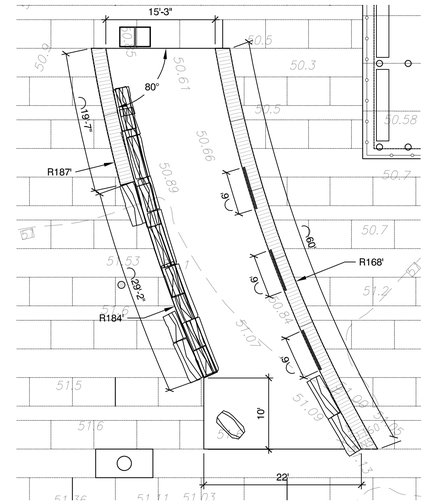

D SEATWALLS AT ENTRY SIGN
SCALE: 1" = 10' - 0"

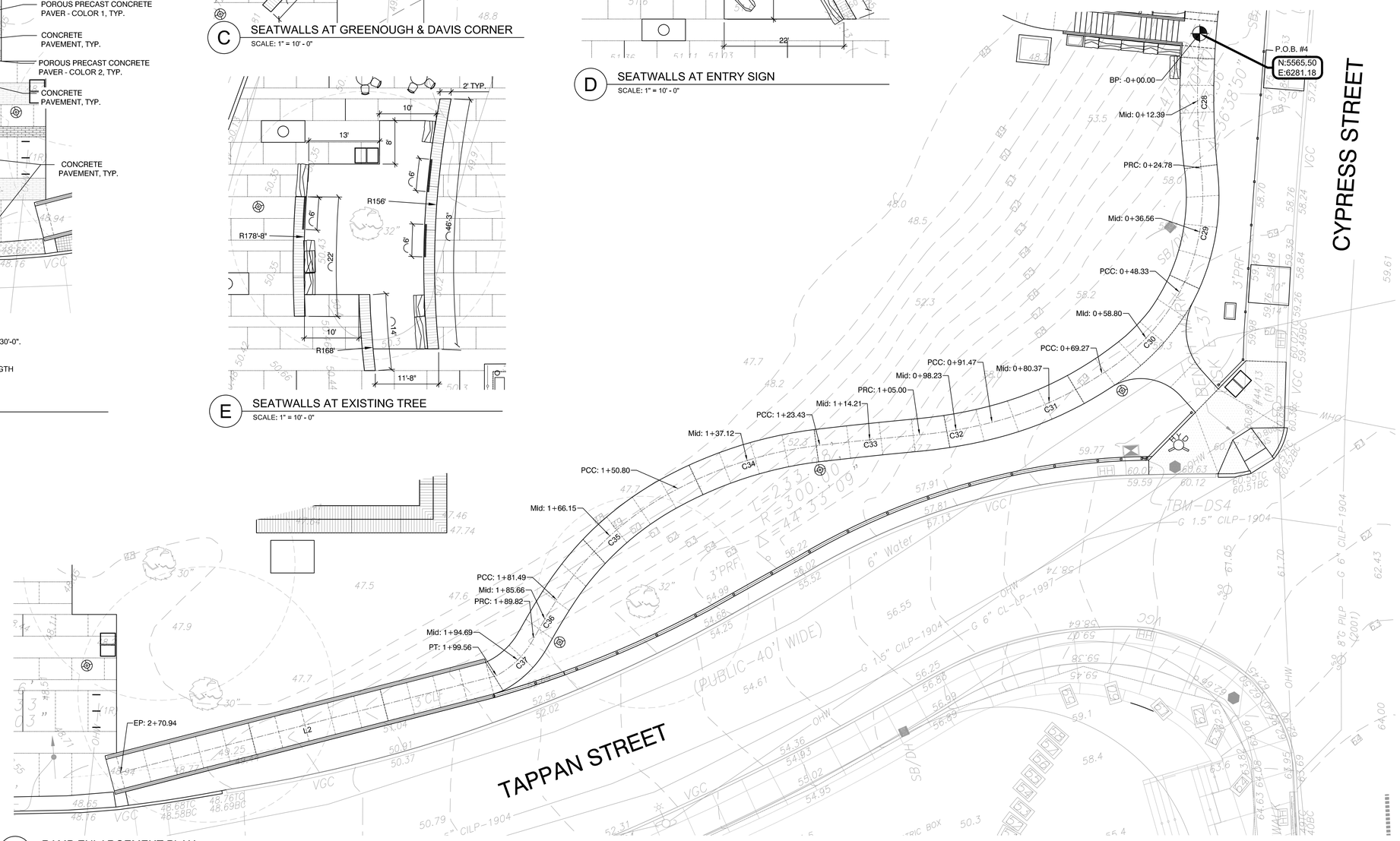

A RAMP ENLARGEMENT PLAN
SCALE: 1" = 10' - 0"

CURVE TABLE				
CURVE #	RADIUS	LENGTH	BEGIN	END
C28	144.0	24.8	N: 5565.5047 E: 6281.1775	N: 5542.7601 E: 6271.4245
C29	39.0	23.6	N: 5542.7601 E: 6271.4245	N: 5523.4019 E: 6258.6318
C30	41.0	20.9	N: 5523.4019 E: 6258.6318	N: 5515.4066 E: 6239.5270
C31	67.0	22.2	N: 5515.4066 E: 6239.5270	N: 5515.3708 E: 6217.4274
C32	86.0	13.5	N: 5515.3708 E: 6217.4274	N: 5518.6195 E: 6204.3139
C33	776.0	18.4	N: 5518.6195 E: 6204.3139	N: 5524.2351 E: 6186.7583
C34	75.5	27.4	N: 5524.2351 E: 6186.7583	N: 5527.4143 E: 6159.7184
C35	57.0	30.7	N: 5527.4143 E: 6159.7184	N: 5517.6681 E: 6131.0133
C36	143.0	8.3	N: 5517.6681 E: 6131.0133	N: 5512.8106 E: 6124.2455
C37	17.0	9.7	N: 5512.8106 E: 6124.2455	N: 5509.3325 E: 6115.2927

LINE TABLE			
LINE #	LENGTH	BEGIN	END
L2	71.4	N: 5509.3325 E: 6115.293	N: 5520.8182 E: 6044.8489

SCALE:
1" = 10'-0"
0 5 10 20FT

Project:
TOWN OF BROOKLINE, MA

CYPRESS STREET PLAYGROUND

Weston & Sampson
85 Devonshire Street,
3rd Floor, Boston, MA 02109
617.412.4480 800.SAMPSON
www.westonandsampson.com

Consultants:

Revisions:

No.	Date	Description

Seal:

Issued For:
BIDDING DOCUMENTS

Scale:	AS SHOWN
Date:	MAY 26, 2020
Drawn By:	LR, EB, HC
Reviewed By:	BMK
Approved By:	ERB
W&S Project No:	2190095
W&S File No:	

Drawing Title:
LAYOUT PLAN-ENLARGEMENTS

Sheet Number:
L4.03

COPYRIGHT 2020 WESTON & SAMPSON

LEGEND

LIMIT OF WORK	
MATCH LINE	
ENLARGEMENT PLAN	
EXISTING DRAINAGE STRUCTURE. SEE UTILITIES PLAN	
12	EXISTING CONTOURS
95.10	EXISTING SPOT ELEVATION
14 / 15	PROPOSED CONTOURS
1.5%	PROPOSED SLOPE
8.25	PROPOSED SPOT ELEVATION
	CATCH BASIN
	AREA DRAIN
CO	CLEAN OUT
	DRAINAGE MAN HOLE
	SEWER MAN HOLE
	GRADE BREAK
HP	HIGH POINT
LP	LOW POINT
TW	TOP OF WALL
BW	BOTTOM OF WALL
TS	TOP OF STEP
BS	BOTTOM OF STEP
SUB	SUBGRADE
TC	TOP OF CURB
BC	BOTTOM OF CURB
INV	INVERT
(VIF)	VERIFY IN FIELD

GRADING AND DRAINAGE NOTES

1. ALL WORK RELATING TO INSTALLATION, RENOVATION OR MODIFICATION OF DRAINAGE SERVICES SHALL BE PERFORMED IN ACCORDANCE WITH THE STANDARDS OF THE TOWN OF BROOKLINE.
2. THE CONTRACTOR SHALL VERIFY ALL DIMENSIONS, GRADES AND INVERT ELEVATIONS IN THE FIELD AND REPORT ANY DISCREPANCIES IMMEDIATELY TO THE OWNER AND OWNER'S REPRESENTATIVE.
3. ALL NEW WALKWAYS MUST CONFORM TO CURRENT AMERICANS WITH DISABILITIES ACT (ADA) AND MASSACHUSETTS ARCHITECTURAL ACCESS BOARD (MAAB) REGULATIONS: WALKWAYS SHALL MAINTAIN A CROSS PITCH OF NOT MORE THAN ONE AND A HALF (1.5%) PERCENT AND THE RUNNING SLOPE (PARALLEL TO THE DIRECTION OF TRAVEL) OF 4.5%.
4. MINIMUM SLOPE ON ALL WALKWAYS WILL BE 1:100 OR 1% TO PROVIDE POSITIVE DRAINAGE. ANY DISCREPANCIES NOT ALLOWING THIS TO OCCUR SHALL BE REPORTED TO THE OWNER PRIOR TO CONTINUING WORK.
5. ALL UTILITY GRATES, COVERS OR OTHER SURFACE ELEMENTS INTENDED TO BE EXPOSED AT GRADE SHALL BE FLUSH WITH THE ADJACENT FINISHED GRADE AND ADJUSTED TO PROVIDE A SMOOTH TRANSITION AT ALL EDGES.
6. THE CONTRACTOR SHALL SET SUBGRADE ELEVATIONS TO ALLOW FOR POSITIVE DRAINAGE AND PROVIDE EROSION CONTROL DEVICES, STRUCTURES, MATERIALS AND CONSTRUCTION METHODS TO DIRECT SEDIMENT MIGRATION AWAY FROM DRAINAGE AND OTHER UTILITY SYSTEMS, PUBLIC/PRIVATE STREETS AND WORK AREAS. CLEAN BASINS REGULARLY AND AT THE END OF THE PROJECT.
7. WHERE NEW EARTHWORK MEETS EXISTING EARTHWORK, CONTRACTOR SHALL BLEND NEW EARTHWORK SMOOTHLY INTO EXISTING, PROVIDING VERTICAL CURVES OR ROUNDS AT ALL TOP AND BOTTOM OF SLOPES.
8. WHERE A SPECIFIC LIMIT OF WORK LINE IS NOT OBVIOUS OR IMPLIED, BLEND GRADES TO EXISTING CONDITIONS WITHIN 5 FEET OF PROPOSED CONTOURS.
9. RESTORE ALL DISTURBED AREAS AND LIMITS OF ALL REMOVALS TO LOAM AND SEED UNLESS OTHERWISE NOTED.
10. WHERE NEW IMPROVEMENTS MEET EXISTING CONDITIONS, MEET LINE AND GRADE OF EXISTING ADJACENT PAVEMENTS, TYPICAL
11. ALL PVC SLEEVES FOR IRRIGATION LATERAL PIPING SHALL BE 4" DIA. AND 30" LOCATED 30" BELOW FINISHED GRADE ELEVATIONS OF PAVEMENTS. SEE IRRIGATION PLANS.

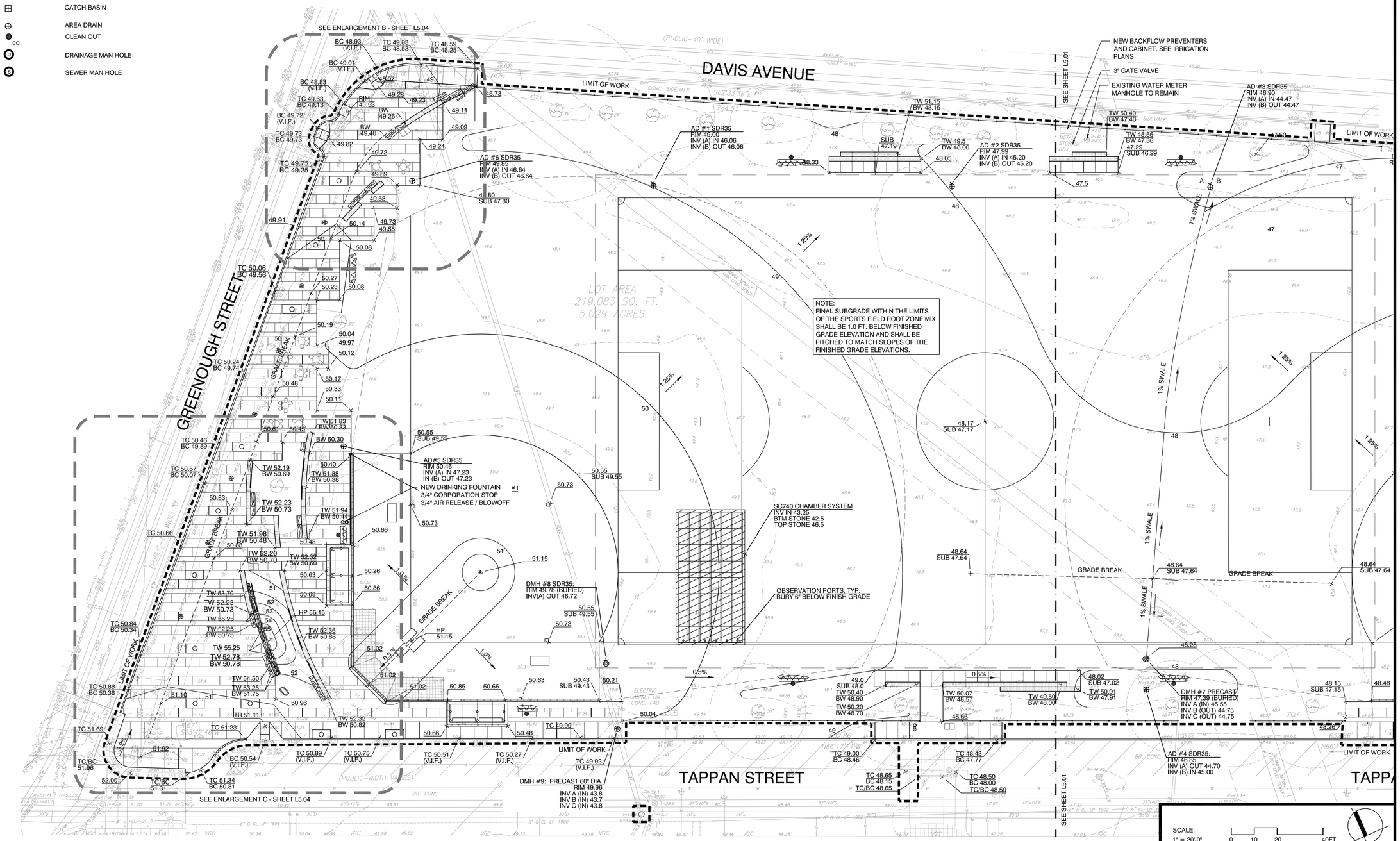

Project:

TOWN OF BROOKLINE, MA

CYPRESS STREET PLAYGROUND

Weston & Sampson

85 Devonshire Street,
3rd Floor, Boston, MA 02109
617.412.4480 800.SAMPSON
www.westonandsampson.com

Consultants:

Revisions:

No.	Date	Description

Seal:

Issued For:

BIDDING DOCUMENTS

Scale:	AS SHOWN
Date:	MAY 26, 2020
Drawn By:	LR, EB, HC
Reviewed By:	BMK
Approved By:	ERB
W&S Project No:	2190095
W&S File No:	

Drawing Title:

GRADING PLAN

Sheet Number:

L5.00

COPYRIGHT 2020 WESTON & SAMPSON

LEGEND

LIMIT OF WORK	
MATCH LINE	
ENLARGEMENT PLAN	
EXISTING DRAINAGE STRUCTURE. SEE UTILITIES PLAN	
12	EXISTING CONTOURS
95.10	EXISTING SPOT ELEVATION
14 / 15	PROPOSED CONTOURS
1.5%	PROPOSED SLOPE
8.25	PROPOSED SPOT ELEVATION
	CATCH BASIN
	AREA DRAIN
CO	CLEAN OUT
D	DRAINAGE MAN HOLE
S	SEWER MAN HOLE
	GRADE BREAK
HP	HIGH POINT
LP	LOW POINT
TW	TOP OF WALL
BW	BOTTOM OF WALL
TS	TOP OF STEP
BS	BOTTOM OF STEP
SUB	SUBGRADE
TC	TOP OF CURB
BC	BOTTOM OF CURB
INV	INVERT
(VIF)	VERIFY IN FIELD

GRADING NOTES

REFER TO SHEET L5.00 FOR GRADING NOTES

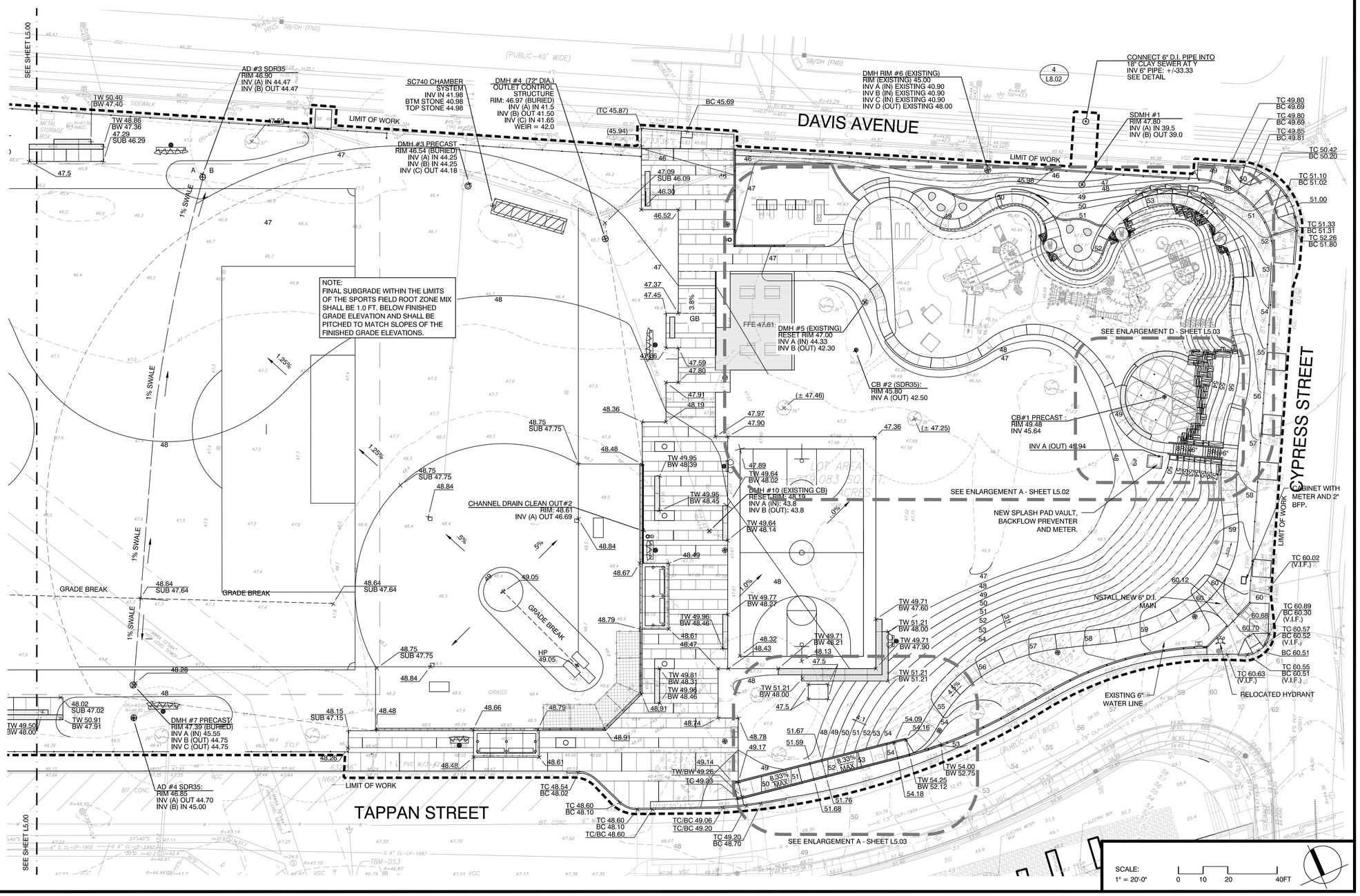

Project:

TOWN OF BROOKLINE, MA

CYPRESS STREET PLAYGROUND

Weston & Sampson

85 Devonshire Street,
3rd Floor, Boston, MA 02109
617.412.4480 800.SAMPSON
www.westonandsampson.com

Consultants:

Revisions:

No.	Date	Description

Seal:

Issued For:

BIDDING DOCUMENTS

Scale:	AS SHOWN
Date:	MAY 26, 2020
Drawn By:	LR, EB, HC
Reviewed By:	BMK
Approved By:	ERB
W&S Project No:	2190095
W&S File No:	

Drawing Title:

GRADING PLAN

Sheet Number:

L5.01

COPYRIGHT 2020 WESTON & SAMPSON

LEGEND

- LIMIT OF WORK
- ENLARGEMENT PLAN
- EXISTING DRAINAGE STRUCTURE. SEE UTILITIES PLAN
- 12 — EXISTING CONTOURS
- 95.10 — EXISTING SPOT ELEVATION
- 14 / 15 — PROPOSED CONTOURS
- 1.5% — PROPOSED SLOPE
- 8.25 — PROPOSED SPOT ELEVATION
- CATCH BASIN
- AREA DRAIN
- CO — CLEAN OUT
- DRAINAGE MAN HOLE
- SEWER MAN HOLE
- GRADE BREAK
- HP — HIGH POINT
- LP — LOW POINT
- TW — TOP OF WALL
- BW — BOTTOM OF WALL
- TS — TOP OF STEP
- BS — BOTTOM OF STEP
- SUB — SUBGRADE
- TC — TOP OF CURB
- BC — BOTTOM OF CURB
- INV — INVERT
- (VIF) — VERIFY IN FIELD

GRADING NOTES

REFER TO SHEET L5.00 FOR GRADING NOTES

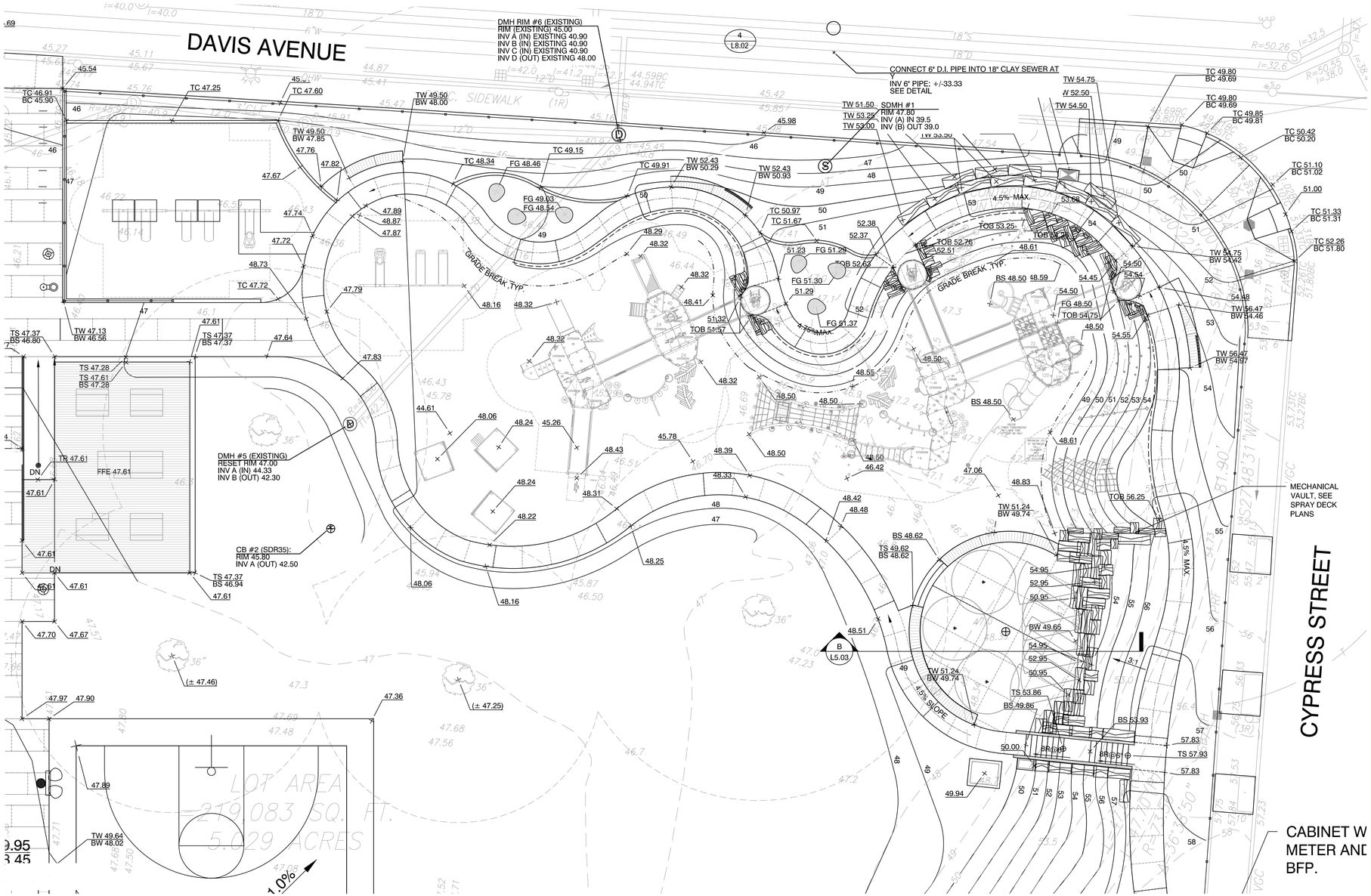

A PLAYGROUND ENLARGEMENT

SCALE: 1" = 10' - 0"

SCALE: 1" = 10'-0" 0 5 10 20FT

Project:

TOWN OF BROOKLINE, MA

CYPRESS STREET PLAYGROUND

Weston & Sampson

85 Devonshire Street,
3rd Floor, Boston, MA 02109
617.412.4480 800.SAMPSON
www.westonandsampson.com

Consultants:

Revisions:

No.	Date	Description

Seal:

Issued For:

BIDDING DOCUMENTS

Scale:	AS SHOWN
Date:	MAY 26, 2020
Drawn By:	LR, EB, HC
Reviewed By:	BMK
Approved By:	ERB
W&S Project No:	2190095
W&S File No:	

Drawing Title:

GRADING ENLARGEMENTS

Sheet Number:

L5.02

COPYRIGHT 2020 WESTON & SAMPSON

LEGEND

LIMIT OF WORK	
ENLARGEMENT PLAN	
EXISTING DRAINAGE STRUCTURE. SEE UTILITIES PLAN	
12	EXISTING CONTOURS
95.10	EXISTING SPOT ELEVATION
14 / 15	PROPOSED CONTOURS
1.5%	PROPOSED SLOPE
8.25	PROPOSED SPOT ELEVATION
	CATCH BASIN
	AREA DRAIN
CO	CLEAN OUT
	GRADE BREAK
	SLOT DRAIN
HP	HIGH POINT
LP	LOW POINT
TW	TOP OF WALL
BW	BOTTOM OF WALL
TS	TOP OF STEP
BS	BOTTOM OF STEP
D	DRAINAGE MAN HOLE
S	SEWER MAN HOLE

GRADING NOTES

REFER TO SHEET L5.00 FOR GRADING NOTES

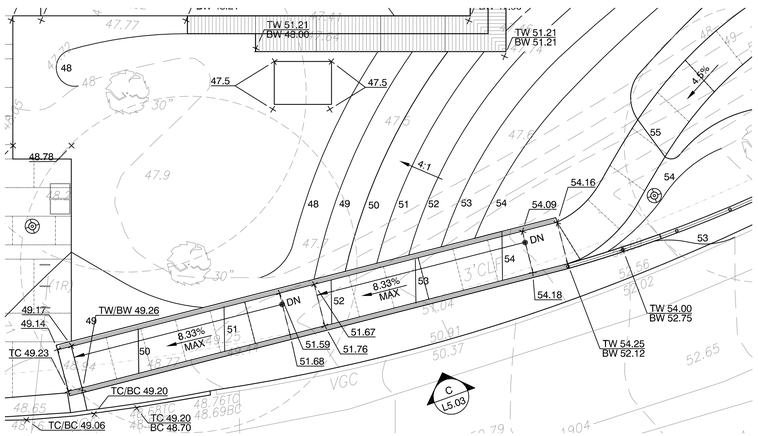

A ENLARGEMENT AT ADA RAMP

SCALE: 1" = 10' - 0"

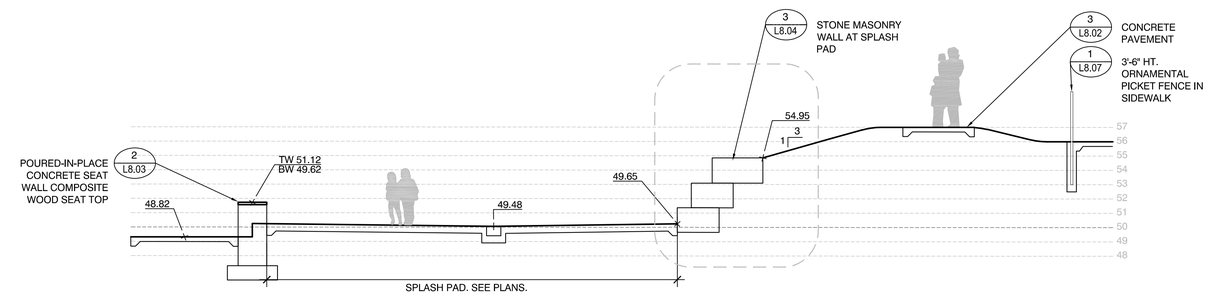

B SPLASH PAD SECTION

SCALE: 1" = 5' - 0"

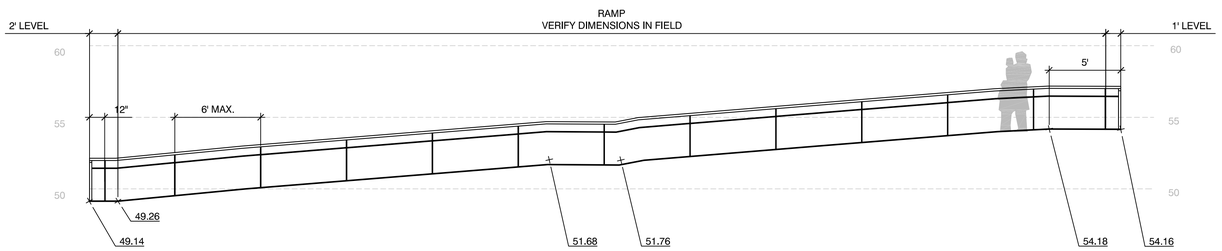

C ADA RAMP ELEVATION

SCALE: 1" = 5' - 0"

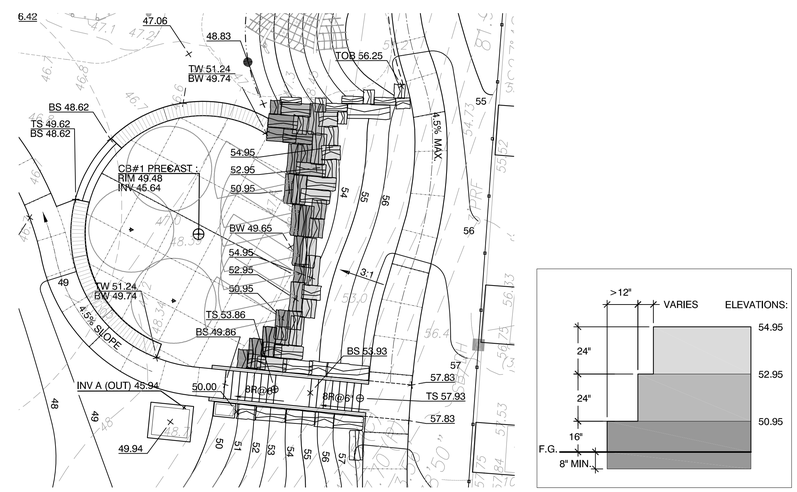

D SPLASH PAD GRANITE BLOCK ENLARGEMENT

SCALE: 1" = 10' - 0"

Project:

TOWN OF BROOKLINE, MA

CYPRESS STREET PLAYGROUND

Weston & Sampson

85 Devonshire Street,
3rd Floor, Boston, MA 02109
617.412.4480 800.SAMPSON
www.westonandsampson.com

Consultants:

Revisions:

No.	Date	Description

Seal:

Issued For:

BIDDING DOCUMENTS

Scale:	AS SHOWN
Date:	MAY 26, 2020
Drawn By:	LR, EB, HC
Reviewed By:	BMK
Approved By:	ERB
W&S Project No:	2190095
W&S File No:	

Drawing Title:

GRADING ENLARGEMENTS AND SECTIONS

Sheet Number:

L5.03

COPYRIGHT 2020 WESTON & SAMPSON

LEGEND

	LIMIT OF WORK
	ENLARGEMENT PLAN
	EXISTING DRAINAGE STRUCTURE. SEE UTILITIES PLAN
12	EXISTING CONTOURS
95.10	EXISTING SPOT ELEVATION
14 / 15	PROPOSED CONTOURS
1.5%	PROPOSED SLOPE
8.25	PROPOSED SPOT ELEVATION
	CATCH BASIN
	AREA DRAIN
CO	CLEAN OUT
D	DRAINAGE MAN HOLE
S	SEWER MAN HOLE
	WATER LINE
HDPE PERF. DRAIN PIPE	HDPE PERFORATED DRAIN PIPE, DIAMETER VARIES
HDPE SOLID DRAIN PIPE	HDPE SOLID DRAIN PIPE, DIAMETER VARIES
	GRADE BREAK
	SLOT DRAIN
HP	HIGH POINT
LP	LOW POINT
TW	TOP OF WALL
BW	BOTTOM OF WALL
TS	TOP OF STEP
BS	BOTTOM OF STEP

GRADING NOTES

REFER TO SHEET L5.00 FOR GRADING NOTES

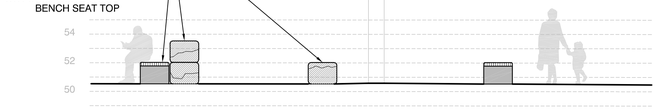

A GREENOUGH STREET - SECTION

SCALE: 1" = 5' - 0"

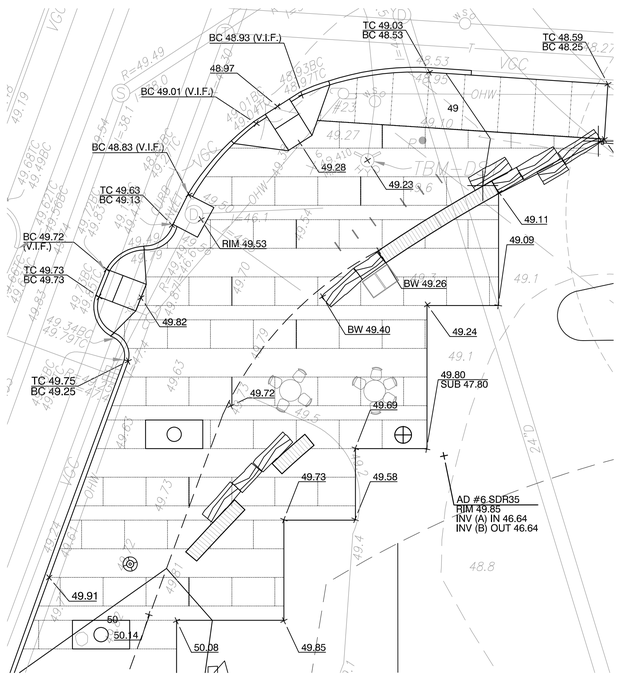

B GREENOUGH STREET NORTH ENLARGEMENT

SCALE: 1" = 10' - 0"

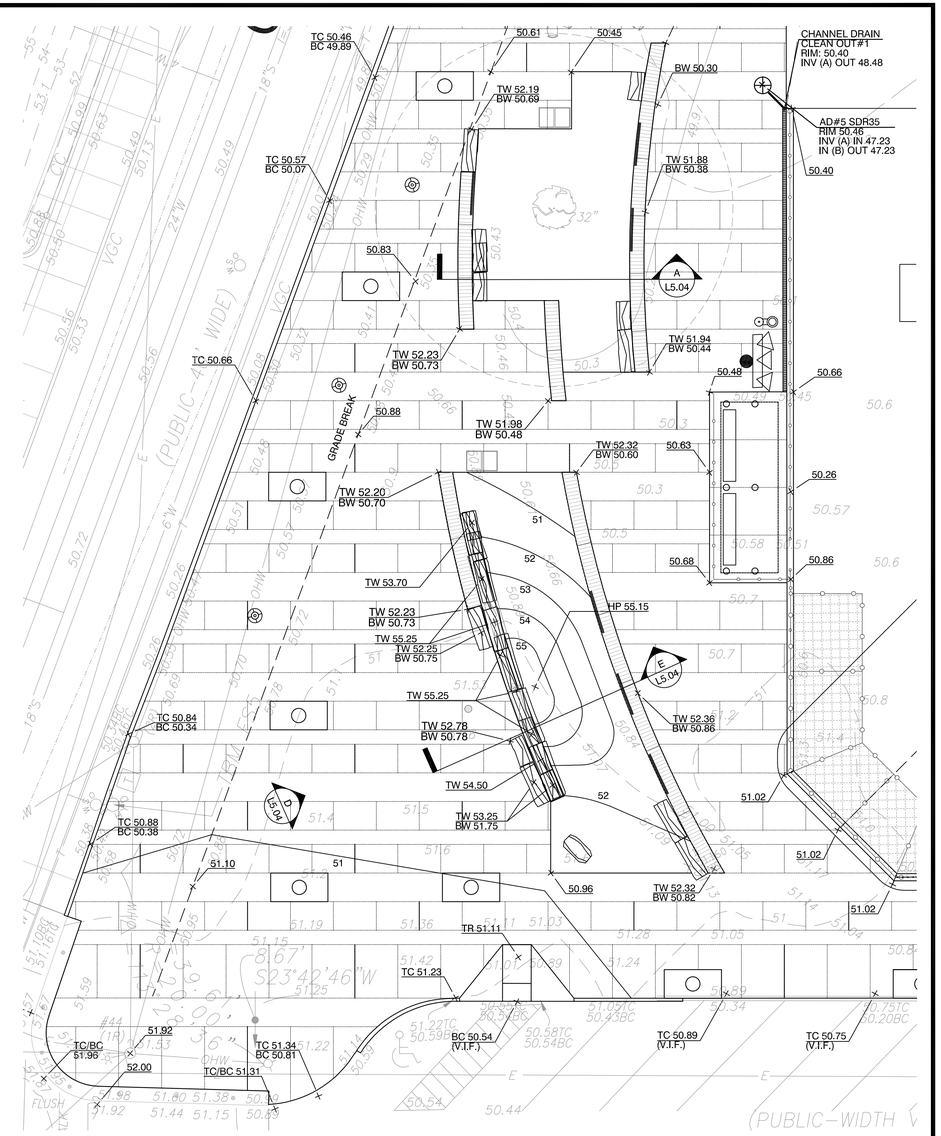

C GREENOUGH STREET SOUTH ENLARGEMENT

SCALE: 1" = 10' - 0"

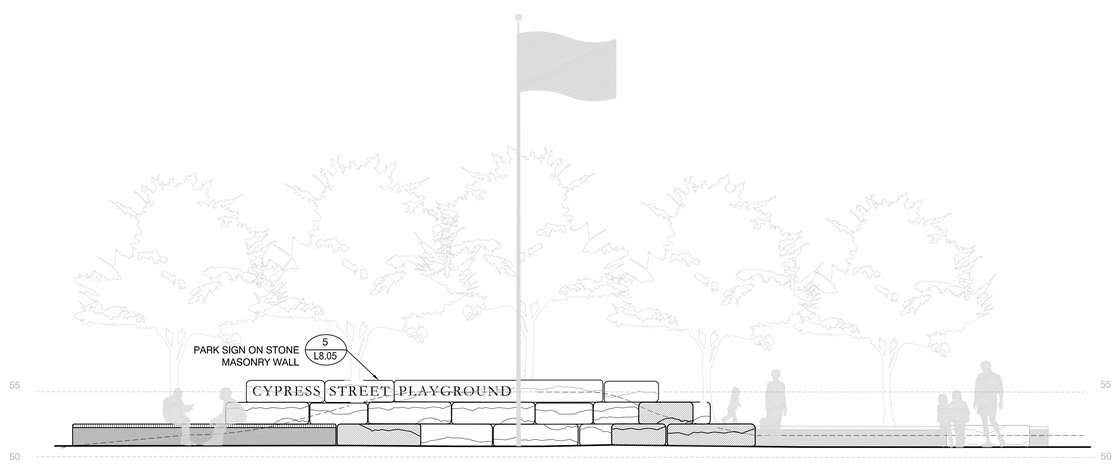

D ENTRY SIGN ELEVATION B

SCALE: 1" = 5' - 0"

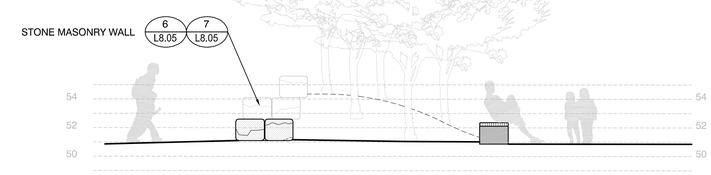

E GREENOUGH STREET ENTRY- SECTION

SCALE: 1" = 5' - 0"

Project:

TOWN OF BROOKLINE, MA

CYPRESS STREET PLAYGROUND

Weston & Sampson

85 Devonshire Street,
3rd Floor, Boston, MA 02109
617.412.4480 800.SAMPSON
www.westonandsampson.com

Consultants:

Revisions:

No.	Date	Description

Seal:

Issued For:

BIDDING DOCUMENTS

Scale:	AS SHOWN
Date:	MAY 26, 2020
Drawn By:	LR, EB, HC
Reviewed By:	BMK
Approved By:	ERB
W&S Project No:	2190095
W&S File No:	

Drawing Title:

GRADING ENLARGEMENTS AND SECTIONS

Sheet Number:

L5.04

COPYRIGHT 2020 WESTON & SAMPSON

LEGEND

- LIMIT OF WORK
- MATCH LINE
- ENLARGEMENT PLAN
- EXISTING DRAINAGE STRUCTURE. SEE UTILITIES PLAN
- 12 — EXISTING CONTOURS
- 95.10 — EXISTING SPOT ELEVATION
- CATCH BASIN
- AREA DRAIN
- CO — CLEAN OUT
- DRAINAGE MAN HOLE
- SEWER MAN HOLE
- WATER LINE
- HDPE PERF. DRAIN PIPE — HDPE PERFORATED DRAIN PIPE, DIAMETER VARIES
- HDPE SOLID DRAIN PIPE — HDPE SOLID DRAIN PIPE, DIAMETER VARIES
- GRADE BREAK
- CHANNEL DRAIN

GRADING AND DRAINAGE NOTES

1. ALL WORK RELATING TO INSTALLATION, RENOVATION OR MODIFICATION OF DRAINAGE SERVICES SHALL BE PERFORMED IN ACCORDANCE WITH THE STANDARDS OF THE TOWN OF BROOKLINE.
2. THE CONTRACTOR SHALL VERIFY ALL DIMENSIONS, GRADES AND INVERT ELEVATIONS IN THE FIELD AND REPORT ANY DISCREPANCIES IMMEDIATELY TO THE OWNER AND OWNER'S REPRESENTATIVE.
3. ALL NEW WALKWAYS MUST CONFORM TO CURRENT AMERICANS WITH DISABILITIES ACT (ADA) AND MASSACHUSETTS ARCHITECTURAL ACCESS BOARD (MAAB) REGULATIONS: WALKWAYS SHALL MAINTAIN A CROSS PITCH OF NOT MORE THAN ONE AND A HALF (1.5%) PERCENT AND THE RUNNING SLOPE (PARALLEL TO THE DIRECTION OF TRAVEL) OF 4.5%.
4. MINIMUM SLOPE ON ALL WALKWAYS WILL BE 1:100 OR 1% TO PROVIDE POSITIVE DRAINAGE. ANY DISCREPANCIES NOT ALLOWING THIS TO OCCUR SHALL BE REPORTED TO THE OWNER PRIOR TO CONTINUING WORK.
5. ALL UTILITY GRATES, COVERS OR OTHER SURFACE ELEMENTS INTENDED TO BE EXPOSED AT GRADE SHALL BE FLUSH WITH THE ADJACENT FINISHED GRADE AND ADJUSTED TO PROVIDE A SMOOTH TRANSITION AT ALL EDGES.
6. THE CONTRACTOR SHALL SET SUBGRADE ELEVATIONS TO ALLOW FOR POSITIVE DRAINAGE AND PROVIDE EROSION CONTROL DEVICES, STRUCTURES, MATERIALS AND CONSTRUCTION METHODS TO DIRECT SEDIMENT MIGRATION AWAY FROM DRAINAGE AND OTHER UTILITY SYSTEMS, PUBLIC/PRIVATE STREETS AND WORK AREAS. CLEAN BASINS REGULARLY AND AT THE END OF THE PROJECT.
7. WHERE NEW EARTHWORK MEETS EXISTING EARTHWORK, CONTRACTOR SHALL BLEND NEW EARTHWORK SMOOTHLY INTO EXISTING, PROVIDING VERTICAL CURVES OR ROUNDS AT ALL TOP AND BOTTOM OF SLOPES.
8. WHERE A SPECIFIC LIMIT OF WORK LINE IS NOT OBVIOUS OR IMPLIED, BLEND GRADES TO EXISTING CONDITIONS WITHIN 5 FEET OF PROPOSED CONTOURS.
9. RESTORE ALL DISTURBED AREAS AND LIMITS OF ALL REMOVALS TO LOAM AND SEED UNLESS OTHERWISE NOTED.
10. WHERE NEW IMPROVEMENTS MEET EXISTING CONDITIONS, MEET LINE AND GRADE OF EXISTING ADJACENT PAVEMENTS, TYPICAL.

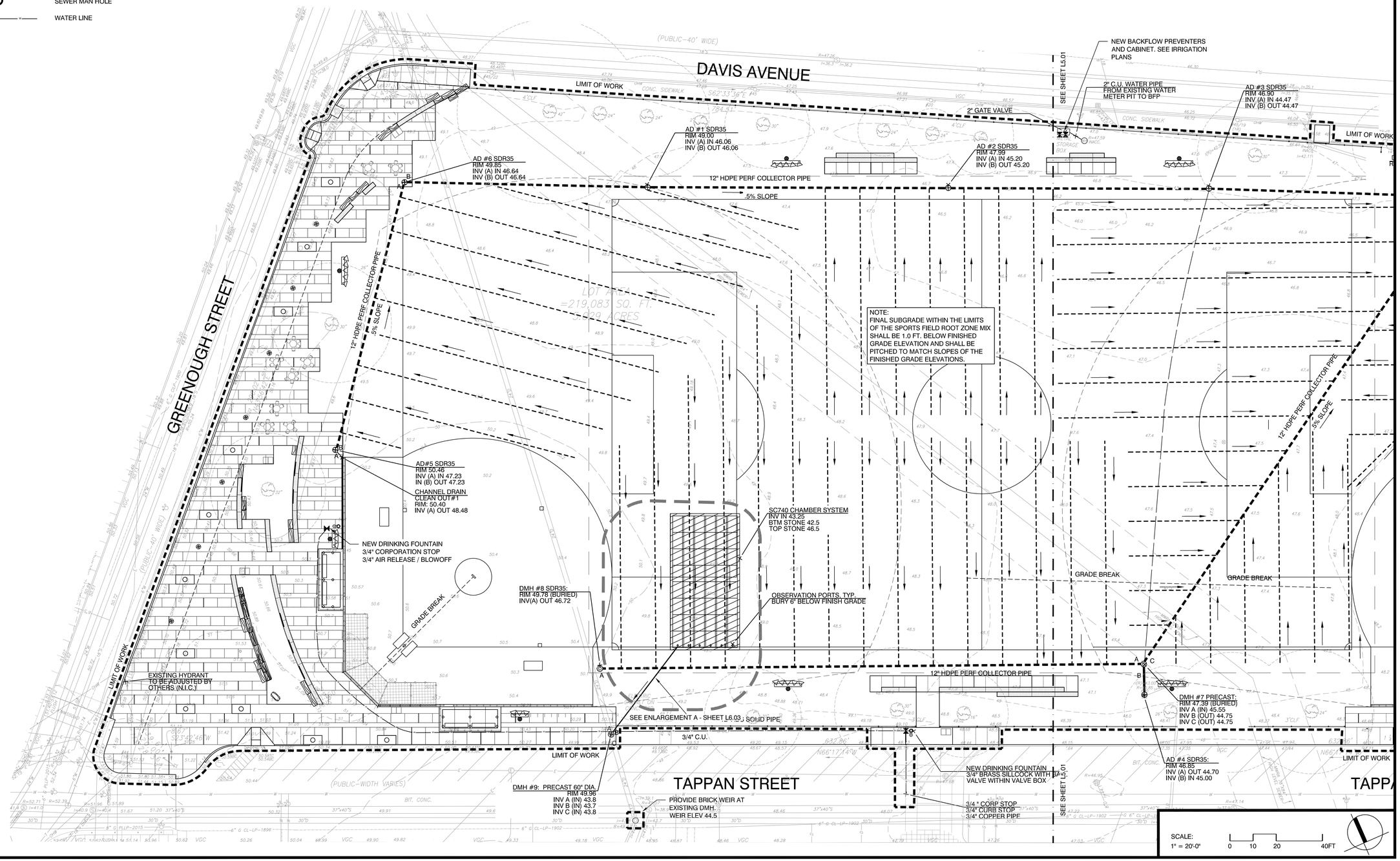

Project:

TOWN OF BROOKLINE, MA

CYPRESS STREET PLAYGROUND

Weston & Sampson

85 Devonshire Street,
3rd Floor, Boston, MA 02109
617.412.4480 800.SAMPSON
www.westonandsampson.com

Consultants:

Revisions:

No.	Date	Description

Seal:

Issued For:

BIDDING DOCUMENTS

Scale:	AS SHOWN
Date:	MAY 26, 2020
Drawn By:	LR, EB, HC
Reviewed By:	BMK
Approved By:	ERB
W&S Project No:	2190095
W&S File No:	

Drawing Title:

UTILITIES PLAN

Sheet Number:

L6.00

COPYRIGHT 2020 WESTON & SAMPSON

LEGEND

- LIMIT OF WORK
- MATCH LINE
- ENLARGEMENT PLAN
- EXISTING DRAINAGE STRUCTURE. SEE UTILITIES PLAN
- 12 — EXISTING CONTOURS
- 95.10 — EXISTING SPOT ELEVATION
- CATCH BASIN
- AREA DRAIN
- CO — CLEAN OUT
- DRAINAGE MAN HOLE
- SEWER MAN HOLE
- WATER LINE
- HDPE PERF. DRAIN PIPE — HDPE PERFORATED DRAIN PIPE, DIAMETER VARIES
- HDPE SOLID DRAIN PIPE — HDPE SOLID DRAIN PIPE, DIAMETER VARIES
- GRADE BREAK
- CHANNEL DRAIN

GRADING NOTES

REFER TO SHEET L5.00 FOR GRADING NOTES

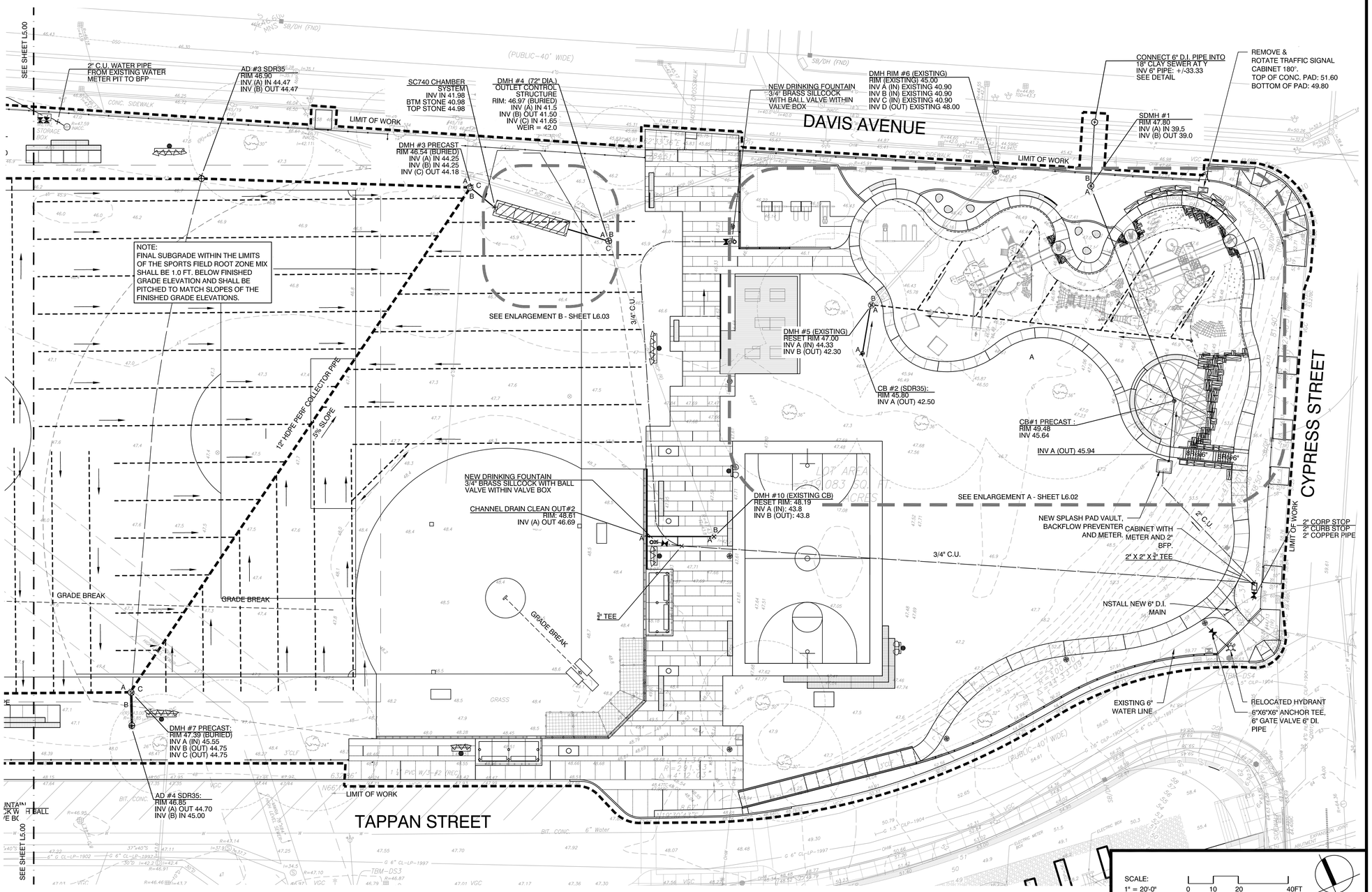

SCALE: 1" = 20'-0" 0 10 20 40FT

Project:

TOWN OF BROOKLINE, MA

CYPRESS STREET PLAYGROUND

Weston & Sampson

85 Devonshire Street,
3rd Floor, Boston, MA 02109
617.412.4480 800.SAMPSON
www.westonandsampson.com

Consultants:

Revisions:

No.	Date	Description

Seal:

Issued For:

BIDDING DOCUMENTS

Scale:	AS SHOWN
Date:	MAY 26, 2020
Drawn By:	LR, EB, HC
Reviewed By:	BMK
Approved By:	ERB
W&S Project No:	2190095
W&S File No:	

Drawing Title:

UTILITIES PLAN

Sheet Number:

L6.01

COPYRIGHT 2020 WESTON & SAMPSON

LEGEND

- LIMIT OF WORK
- ENLARGEMENT PLAN
- EXISTING DRAINAGE STRUCTURE. SEE UTILITIES PLAN
- EXISTING CONTOURS
- EXISTING SPOT ELEVATION
- CATCH BASIN
- AREA DRAIN
- CLEAN OUT
- DRAINAGE MAN HOLE
- SEWER MAN HOLE
- WATER LINE

HDPE PERF. DRAIN PIPE — HDPE PERFORATED DRAIN PIPE, DIAMETER VARIES

HDPE SOLID DRAIN PIPE — HDPE SOLID DRAIN PIPE, DIAMETER VARIES

GRADE BREAK

CHANNEL DRAIN

GRADING NOTES

REFER TO SHEET L5.00 FOR GRADING NOTES

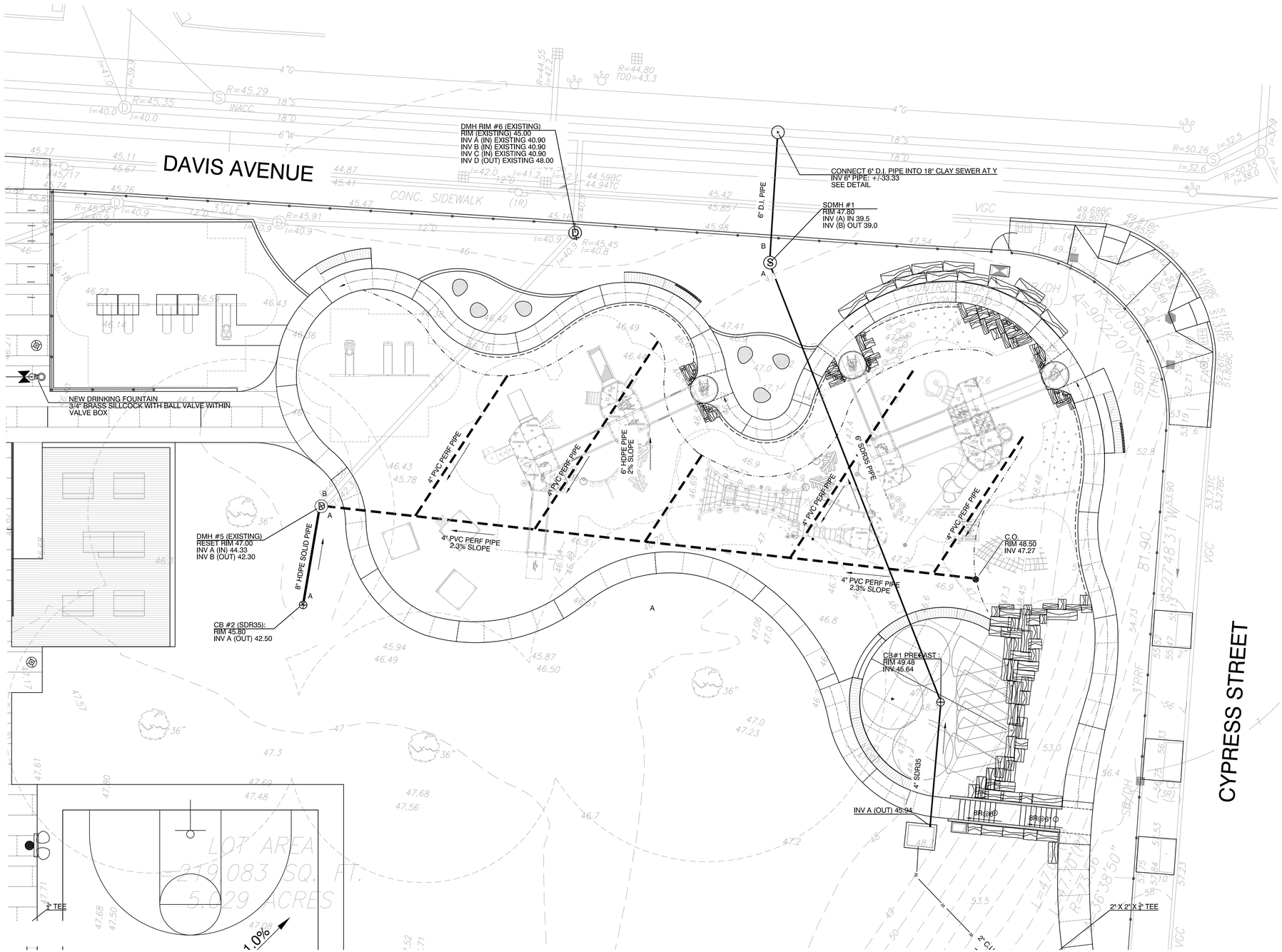

A PLAYGROUND ENLARGEMENT

SCALE: 1" = 10' - 0"

SCALE: 1" = 10'-0" 0 5 10 20FT

Project:

TOWN OF BROOKLINE, MA

CYPRESS STREET PLAYGROUND

Weston & Sampson

85 Devonshire Street,
3rd Floor, Boston, MA 02109
617.412.4480 800.SAMPSON
www.westonandsampson.com

Consultants:

Revisions:

No.	Date	Description

Seal:

Issued For:

BIDDING DOCUMENTS

Scale:	AS SHOWN
Date:	MAY 26, 2020
Drawn By:	LR, EB, HC
Reviewed By:	BMK
Approved By:	ERB
W&S Project No:	2190095
W&S File No:	

Drawing Title:

UTILITY PLAN ENLARGEMENT

Sheet Number:

L6.02

COPYRIGHT 2020 WESTON & SAMPSON

LEGEND

	LIMIT OF WORK
	ENLARGEMENT PLAN
	EXISTING DRAINAGE STRUCTURE. SEE UTILITIES PLAN
12	EXISTING CONTOURS
95.10	EXISTING SPOT ELEVATION
	CATCH BASIN
	AREA DRAIN
CO	CLEAN OUT
D	DRAINAGE MAN HOLE
S	SEWER MAN HOLE
W	WATER LINE

HDPE PERF. DRAIN PIPE	HDPE PERFORATED DRAIN PIPE, DIAMETER VARIES
HDPE SOLID DRAIN PIPE	HDPE SOLID DRAIN PIPE, DIAMETER VARIES
	GRADE BREAK
	SLOT DRAIN

GRADING NOTES

REFER TO SHEET L5.00 FOR GRADING NOTES

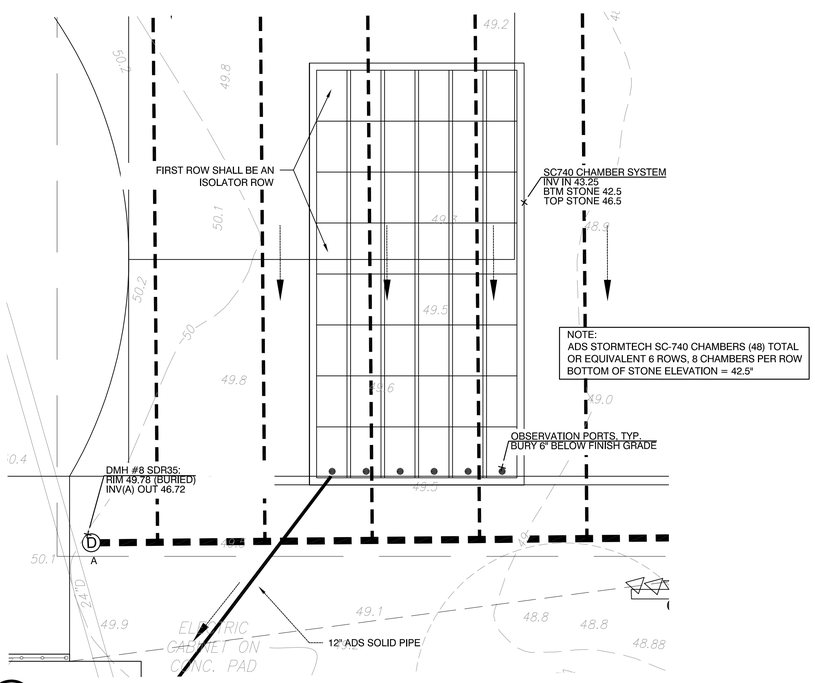

B STORMWATER CHAMBER ENLARGEMENT

SCALE: 1" = 10' - 0"

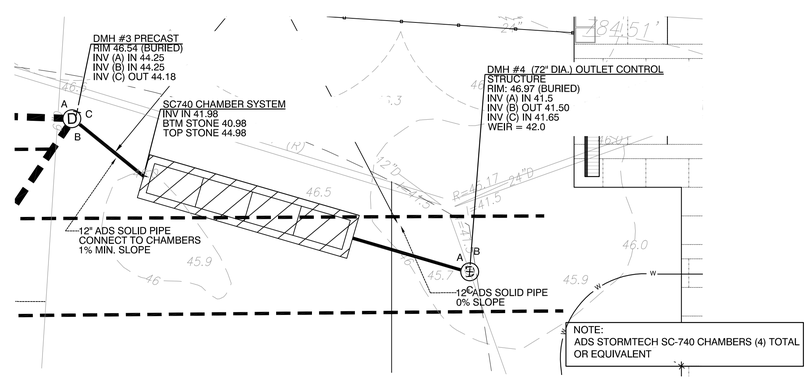

B STORMWATER CHAMBER ENLARGEMENT

SCALE: 1" = 10' - 0"

Project:

TOWN OF BROOKLINE, MA

CYPRESS STREET PLAYGROUND

Weston & Sampson

85 Devonshire Street,
3rd Floor, Boston, MA 02109
617.412.4480 800.SAMPSON
www.westonandsampson.com

Consultants:

Revisions:

No.	Date	Description

Seal:

Issued For:

BIDDING DOCUMENTS

Scale:	AS SHOWN
Date:	MAY 26, 2020
Drawn By:	LR, EB, HC
Reviewed By:	BMK
Approved By:	ERB
W&S Project No:	2190095
W&S File No:	

Drawing Title:

UTILITY PLAN ENLARGEMENT-STORMWATER CHAMBERS

Sheet Number:

L6.03

COPYRIGHT 2020 WESTON & SAMPSON

LEGEND

- LIMIT OF WORK
- MATCH LINE
- ENLARGEMENT PLAN
- LOAM & SEED, TYP.
- MASS SHRUB PLANTING AREAS, TYP.
- GROUND COVER AREAS, TYP.
- MULCH TREE BED, TYP.
- PROPOSED TREES
- EXISTING TREES TO REMAIN
- STRUCTURAL SOIL

PLANTING NOTES

1. THE DEPTH OF AMENDED TOPSOIL LOAM FOR ALL PROPOSED LAWN AREAS SHALL BE 6" MINIMUM. ALL DISTURBED AREAS SHALL BE RESTORED WITH LOAM AND SEED UNLESS OTHERWISE NOTED
2. ALL REFERENCES TO LOAM AND SEED REFER TO HYDROMULCH SEEDED LAWN.

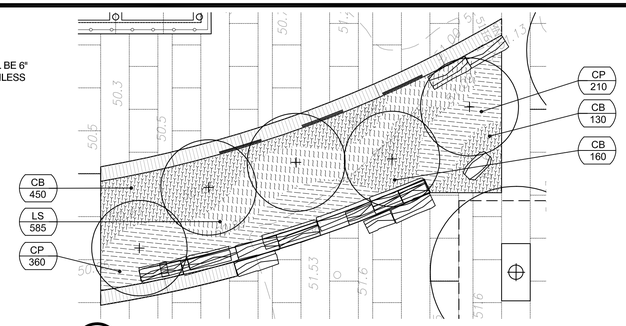

A PLANTING ENLARGEMENT
SCALE: 1" = 10' - 0"

TREES

AR	15	RED MAPLE 'BRANDYWINE'	ACER RUBRUM 'BRANDYWINE'	3-3.5" CAL. B&B	LIMBED UP 8'
ASM	2	SUGAR MAPLE	ACER SACCHARUM 'GREEN MOUNTAIN'	2-2.5" CAL. APRX.	
GT	16	HONEY LOCUST 'SKYLINE'	GLEDITSIA TRIACANTHOS VAR. INERMIS 'SKYLINE'	3-3.5" CAL. B&B	LIMBED UP 8'
PC	3	THUNDER CLOUD CHERRY	PRUNUS CERASIFERA 'THUNDERCLOUD'	3-3.5" CAL.B&B	
PS	3	SARGENT CHERRY	PRUNUS SARGENTII	2-2.5" CAL.B&B	
PK	2	KWANZAN CHERRY	PRUNUS KWANZAN	2-2.5" CAL. APRX.	
QP	5	PIN OAK	QUERCUS PALUSTRIS	3-3.5" CAL. B&B	LIMBED UP 8'
UA	8	AMERICAN ELM 'VALLEY FORGE'	ULMUS AMERICANA 'VALLEY FORGE'	3-3.5" CAL. B&B	LIMBED UP 8'

SHRUBS

CS	28	ARCTIC FIRE RED OSIER DOGWOOD	CORNUS SEIRCEA 'ARCTIC FIRE'	B&B	24"-30" SPR.
IVG	13	WINTERBERRY HOLLY 'WINTER GOLD	ILEX VERTICILLATA 'WINTER GOLD'	B&B	24"-30" SPR.
IVR	15	WINTERBERRY HOLLY 'WINTER RED'	ILEX VERTICILLATA 'WINTER RED	B&B	24"-30" SPR.

GROUND COVER

AS	525	ALLEGHENY SPURGE	PACHYSANDRA PROCUMBENS	FLATS OF 50	SPACE 12" OC
CB	570	BLUE ZINGER SEDGE	CAREX BLUE ZINGER	#2 POT	SPACE 8" OC
CP	740	PENNSYLVANIA SEDGE	CAREX PENSYLVANICA	#2 POT	SPACE 8" OC
LS	585	CREEPING LILYTURF	LIRIOPE SPICATA	#2 POT	SPACE 8" OC
RA	1280	FRAGRANT SUMAC 'GRO LOW'	RHUS AROMATIC 'GRO LOW'	#2 POT	SPACE 36" OC

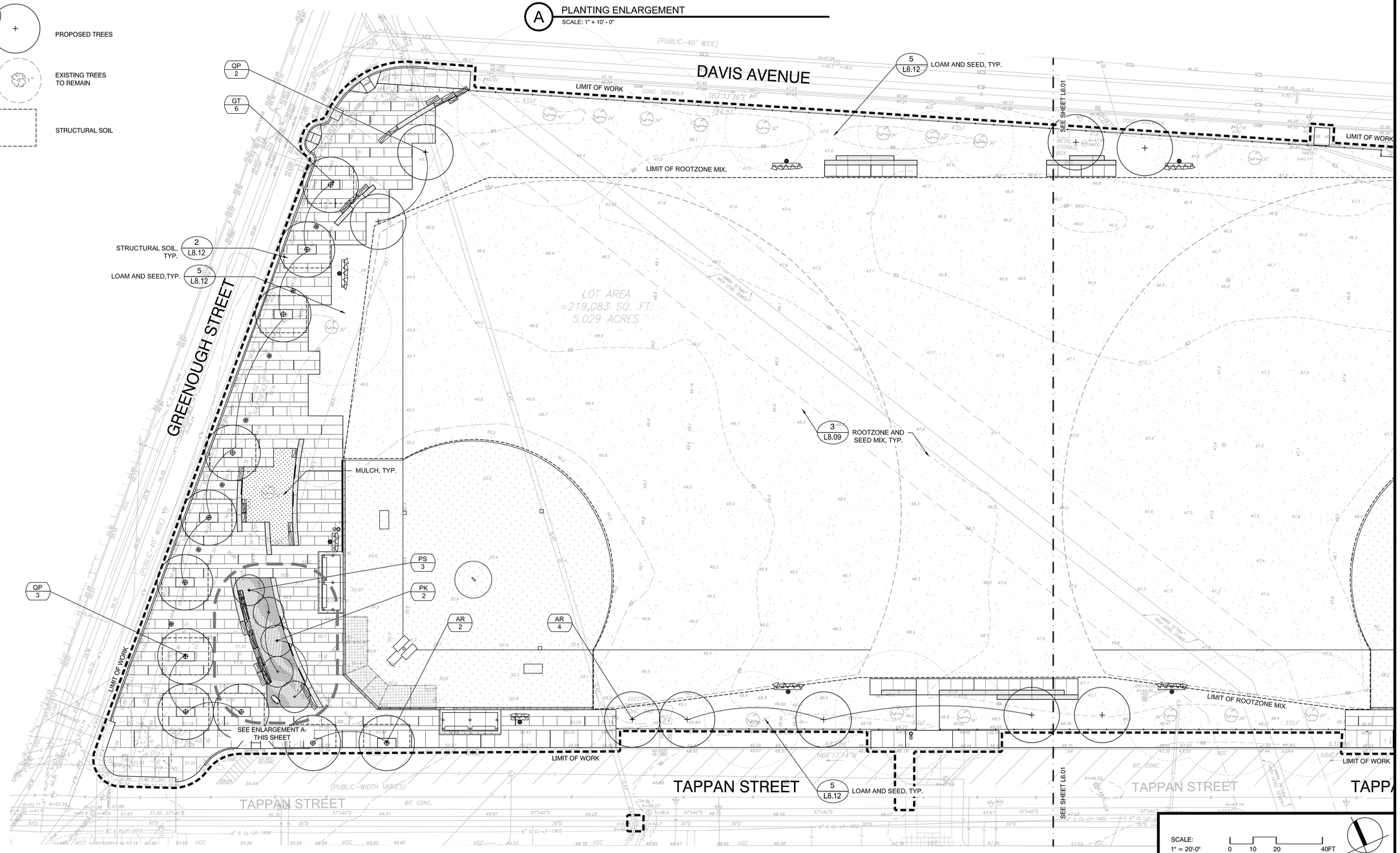

SCALE:
1" = 20'-0"
0 10 20 40FT

Project:
TOWN OF BROOKLINE, MA

CYPRESS STREET PLAYGROUND

Weston & Sampson

85 Devonshire Street,
3rd Floor, Boston, MA 02109
617.412.4480 800.SAMPSON
www.westonandsampson.com

Consultants:

Revisions:

No.	Date	Description

Seal:

Issued For:
BIDDING DOCUMENTS

Scale:	AS SHOWN
Date:	MAY 26, 2020
Drawn By:	LR, EB, HC
Reviewed By:	BMK
Approved By:	ERB
W&S Project No:	2190095
W&S File No:	

Drawing Title:
PLANTING PLAN

Sheet Number:
L7.00

COPYRIGHT 2020 WESTON & SAMPSON

LEGEND

- LIMIT OF WORK
- MATCH LINE
- ENLARGEMENT PLAN
- LOAM & SEED, TYP.
- MASS SHRUB PLANTING AREAS, TYP.
- GROUND COVER AREAS, TYP.
- MULCH TREE BED, TYP.
- PROPOSED TREES
- EXISTING TREES TO REMAIN
- PROPOSED SHRUBS
- STRUCTURAL SOIL

PLANTING NOTES

REFER TO SHEET L6.00 FOR PLANTING NOTES

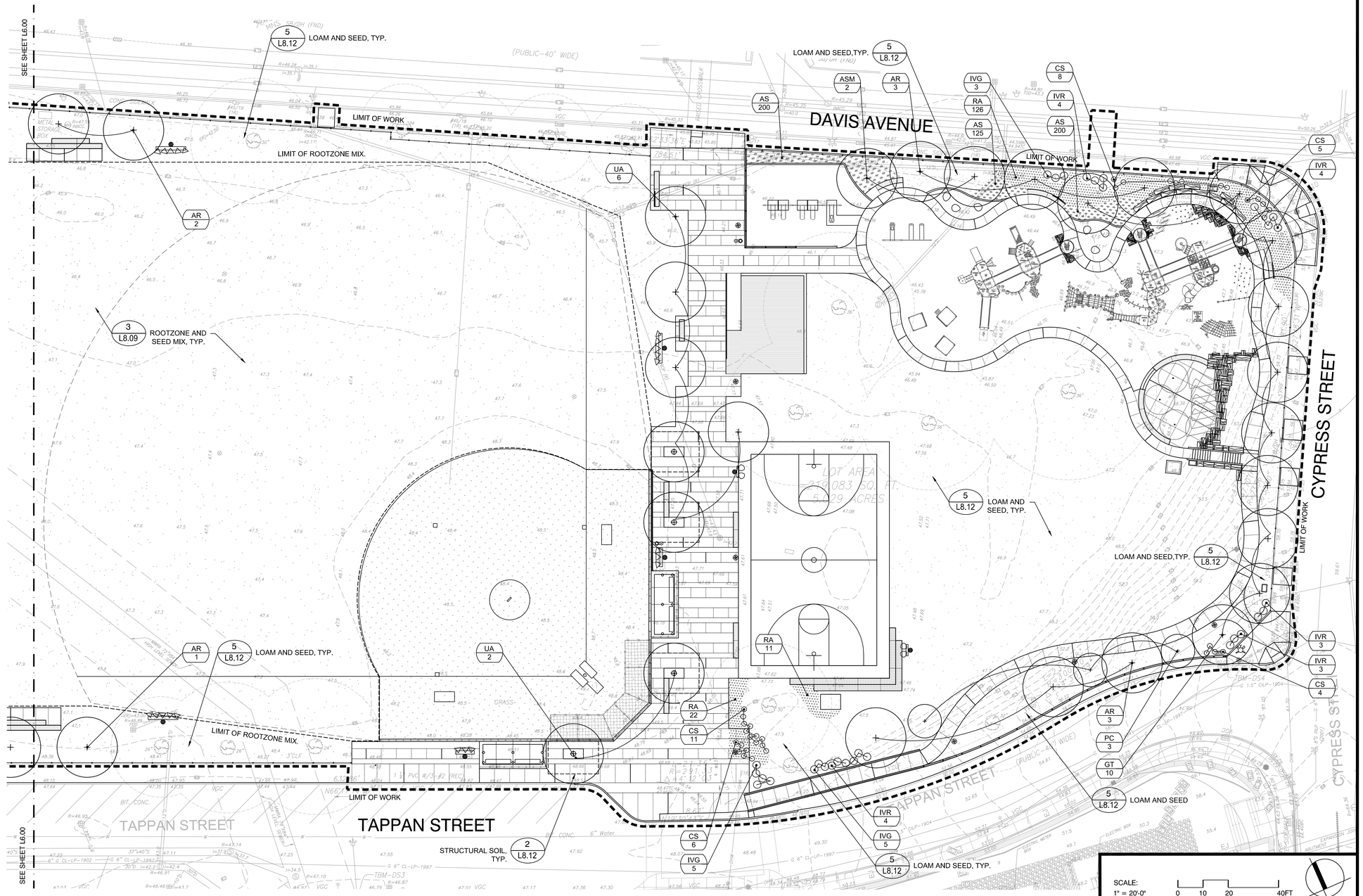

SCALE: 1" = 20'-0" 0 10 20 40FT

Project:

TOWN OF BROOKLINE, MA

CYPRESS STREET PLAYGROUND

Weston & Sampson

85 Devonshire Street,
3rd Floor, Boston, MA 02109
617.412.4480 800.SAMPSON
www.westonandsampson.com

Consultants:

Revisions:

No.	Date	Description

Seal:

Issued For:

BIDDING DOCUMENTS

Scale:	AS SHOWN
Date:	MAY 26, 2020
Drawn By:	LR, EB, HC
Reviewed By:	BMK
Approved By:	ERB
W&S Project No:	2190095
W&S File No:	

Drawing Title:

PLANTING PLAN

Sheet Number:

L7.01

COPYRIGHT 2020 WESTON & SAMPSON

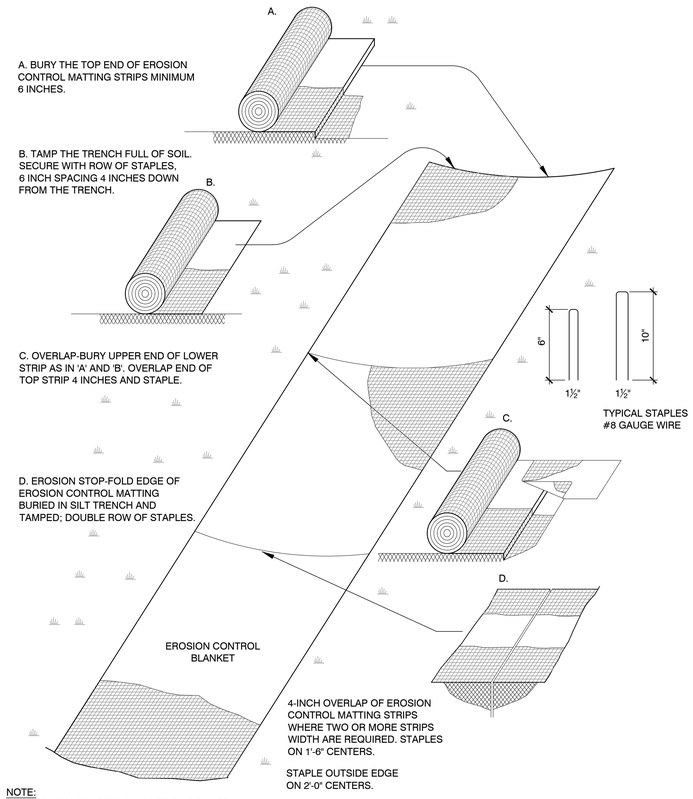

NOTE:
1. EROSION CONTROL BLANKET TO BE USED ON ALL SLOPES GREATER THAN 4H:1VAS INDICATED ON GRADING PLANS

1 EROSION CONTROL BLANKET ON SLOPES

SCALE: N.T.S.

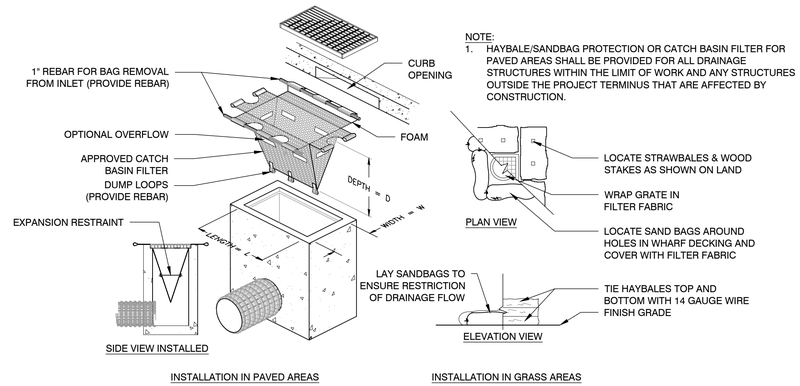

NOTE:
1. HAYBALE/SANDBAG PROTECTION OR CATCH BASIN FILTER FOR PAVED AREAS SHALL BE PROVIDED FOR ALL DRAINAGE STRUCTURES WITHIN THE LIMIT OF WORK AND ANY STRUCTURES OUTSIDE THE PROJECT TERMINUS THAT ARE AFFECTED BY CONSTRUCTION.

2 INLET SEDIMENT CONTROL

SCALE: N.T.S.

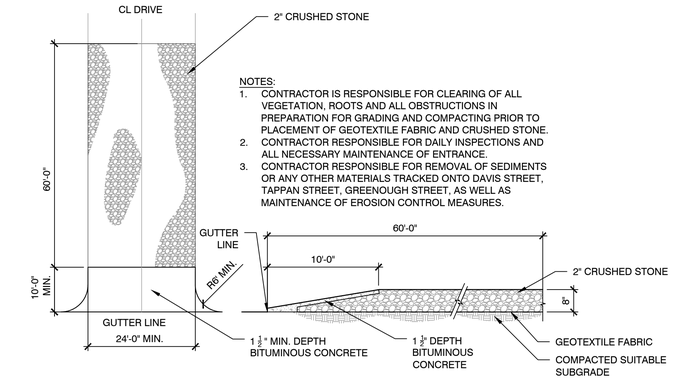

NOTES:
1. CONTRACTOR IS RESPONSIBLE FOR CLEARING OF ALL VEGETATION, ROOTS AND ALL OBSTRUCTIONS IN PREPARATION FOR GRADING AND COMPACTING PRIOR TO PLACEMENT OF GEOTEXTILE FABRIC AND CRUSHED STONE.
2. CONTRACTOR RESPONSIBLE FOR DAILY INSPECTIONS AND ALL NECESSARY MAINTENANCE OF ENTRANCE.
3. CONTRACTOR RESPONSIBLE FOR REMOVAL OF SEDIMENTS OR ANY OTHER MATERIALS TRACKED ONTO DAVIS STREET, TAPPAN STREET, GREENOUGH STREET, AS WELL AS MAINTENANCE OF EROSION CONTROL MEASURES.

3 CONSTRUCTION ENTRANCE PAD

SCALE: N.T.S.

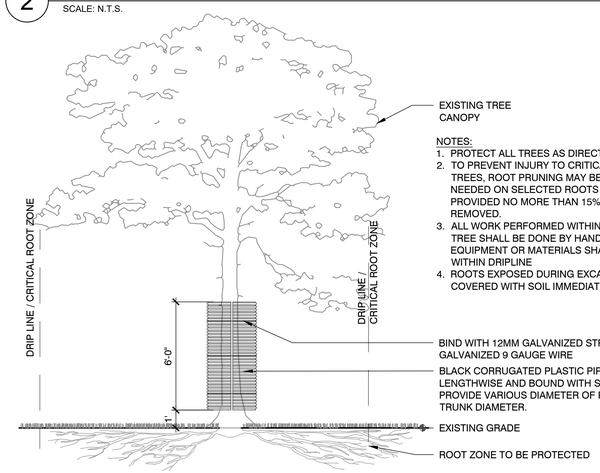

NOTES:
1. PROTECT ALL TREES AS DIRECTED BY THE ENGINEER.
2. TO PREVENT INJURY TO CRITICAL ROOT ZONES OF ADJACENT TREES, ROOT PRUNING MAY BE PERFORMED BY ARBORIST AS NEEDED ON SELECTED ROOTS LESS THAN 2 INCHES IN DIAMETER PROVIDED NO MORE THAN 15% OF THE CRITICAL ROOT ZONE IS REMOVED.
3. ALL WORK PERFORMED WITHIN DRIP LINE / CRITICAL ROOT ZONE OF TREE SHALL BE DONE BY HAND AND LIGHT EQUIPMENT. NO EQUIPMENT OR MATERIALS SHALL BE STORED OR STOCKPILED WITHIN DRIPLINE
4. ROOTS EXPOSED DURING EXCAVATION SHALL BE NEATLY CUT AND COVERED WITH SOIL IMMEDIATELY.

CRITICAL ROOT ZONE TO BE PROTECTED AT ALL TIMES. ALL WORK NECESSARY WITHIN THE CRITICAL ROOT ZONE SHALL BE PERFORMED BY HAND.

4 INDIVIDUAL TREE PROTECTION

SCALE: N.T.S.

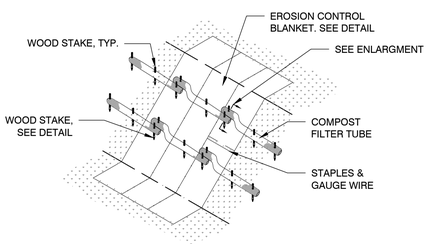

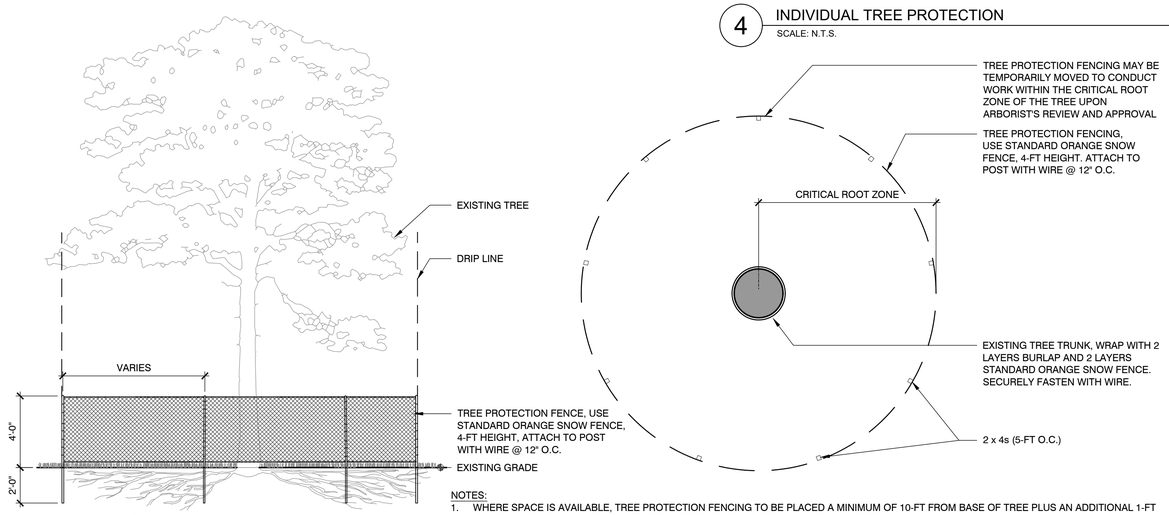

CRITICAL ROOT ZONE TO BE PROTECTED. ALL WORK NECESSARY WITHIN THE CRITICAL ROOT ZONE SHALL BE PERFORMED BY HAND AND LIGHT EQUIPMENT. TO BE APPROVED BY ARBORIST.

NOTES:
1. WHERE SPACE IS AVAILABLE, TREE PROTECTION FENCING TO BE PLACED A MINIMUM OF 10-FT FROM BASE OF TREE PLUS AN ADDITIONAL 1-FT FOR EACH ADDITIONAL DBH FOR TREES GREATER THAN 10" DBH (DIA. AT BREAST HT.)
2. ALL WORK DONE WITHIN TREE PROTECTION FENCING IS TO BE DONE BY HAND AND LIGHT EQUIPMENT. ARBORIST TO APPROVE EQUIPMENT.
3. ROOTS EXPOSED DURING EXCAVATION SHALL BE NEATLY CUT AND COVERED WITH SOIL IMMEDIATELY.
4. FOR TREES THAT OCCUR IN GROUPS PROVIDE TREE PROTECTION FENCING AROUND ENTIRE AREA. SEE PLAN FOR LOCATIONS.
5. MAINTAIN FENCE PROTECTION IN SOUND CONDITION FOR DURATION OF CONSTRUCTION.
6. A CERTIFIED ARBORIST SHALL DELINEATE LIMIT OF TREE PROTECTION FENCING AS THEY RELATE TO THE LIMITS OF THE CRITICAL ROOT ZONE.
7. THE TOWN'S ARBORIST MUST BE ON SITE PRIOR TO COMMENCING ANY WORK TO REVIEW AND LOCATE TREE PROTECTION FENCING. ROOTS EXPOSED WITHIN THE CRITICAL ROOT ZONE MUST BE APPROVED BY THE ARBORIST PRIOR TO CUTTING.

5 TREE PROTECTION FENCING

SCALE: N.T.S.

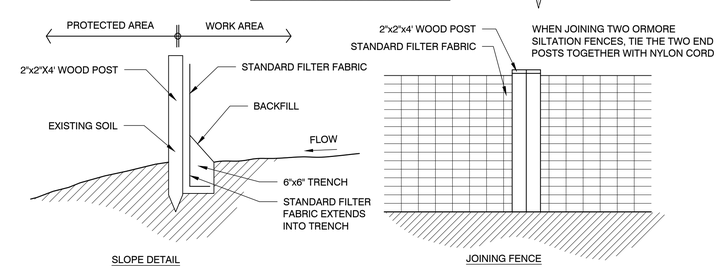

6 SILTATION FENCE AND EROSION CONTROLS

SCALE: N.T.S.

Project:

TOWN OF BROOKLINE, MA

CYPRESS STREET PLAYGROUND

Weston & Sampson

85 Devonshire Street,
3rd Floor, Boston, MA 02109
617.412.4480 800.SAMPSON
www.westonandsampson.com

Consultants:

Revisions:

No.	Date	Description

Seal:

Issued For:

BIDDING DOCUMENTS

Scale:	AS SHOWN
Date:	MAY 26, 2020
Drawn By:	LR, EB, HC
Reviewed By:	BMK
Approved By:	ERB
W&S Project No:	2190095
W&S File No:	

Drawing Title:

DETAILS 1- EROSION CONTROL

Sheet Number:

L8.00

COPYRIGHT 2020 WESTON & SAMPSON

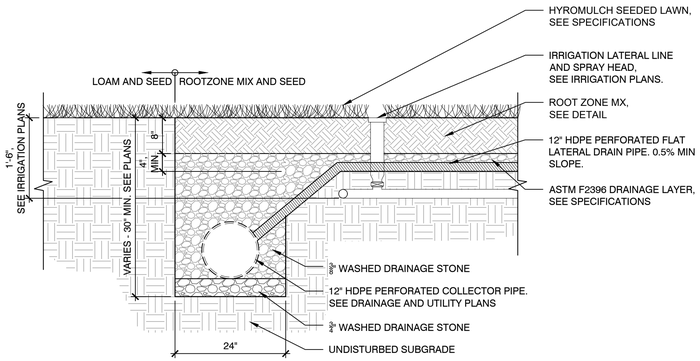

NOTES:
1. FLAT DRAIN TO BE DIRECTLY CONNECTED TO PERIMETER COLLECTOR PIPE. PROVIDE MANUFACTURED FITTINGS TO MAKE THE CONNECTION AS REQUIRED AND APPROVED BY THE OWNER'S REPRESENTATIVE.

1 COLLECTOR DRAIN AT NATURAL TURF FIELD

SCALE: N.T.S.

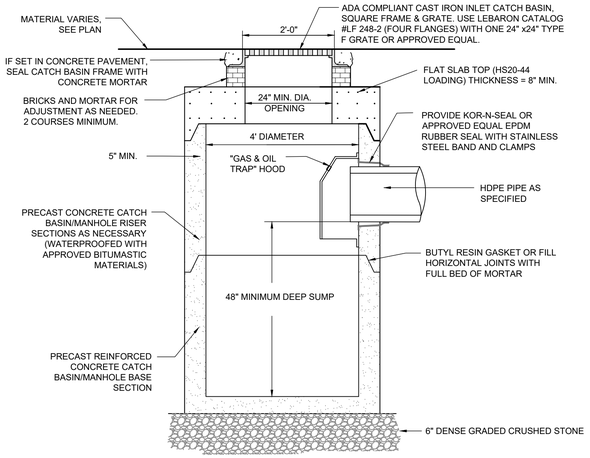

2 CATCH BASIN

SCALE: N.T.S.

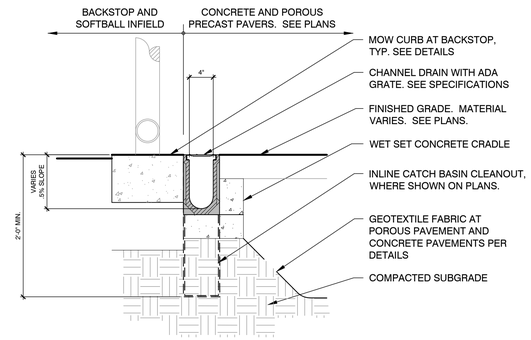

3 CHANNEL DRAIN

SCALE: N.T.S.

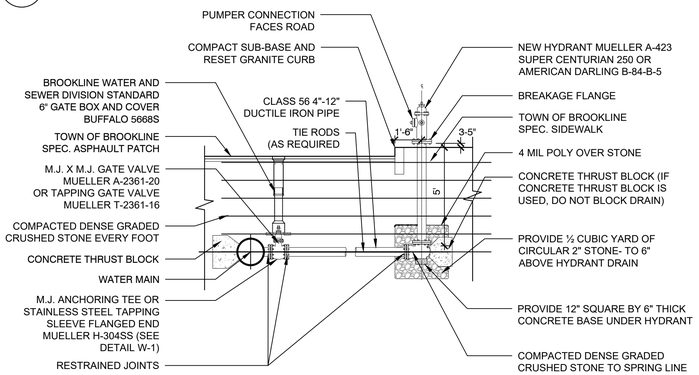

NOTES:
1. CONCRETE THRUST TO BE INSTALLED ONLY WHERE IT WILL BEAR ON UNDISTURBED EARTH.
2. USE RESTRAINED JOINT FITTINGS OR TIE RODS IN ADDITION TO CONCRETE THRUST BLOCK.
3. SIZE OF BLOCK AND MECHANICAL JOINT RESTRAINT SYSTEM TO BE DESIGNED FOR ACTUAL FIELD CONDITIONS.
4. ALL WORK MUST BE SCHEDULED AND INSPECTED BY BROOKLINE WATER & SEWER DIVISION PRIOR TO BACKFILL.

4 RELOCATED FIRE HYDRANT

SCALE: N.T.S.

NOTES:
1. 24" MIN SUMP IS REQUIRED ON CATCH BASINS (DRAIN INLETS) ONLY.
2. GRATES AND/OR COVERS SHALL BE A MINIMUM 30" ROUND AT THE LOCATIONS INDICATED ON THE CONSTRUCTION PLAN.

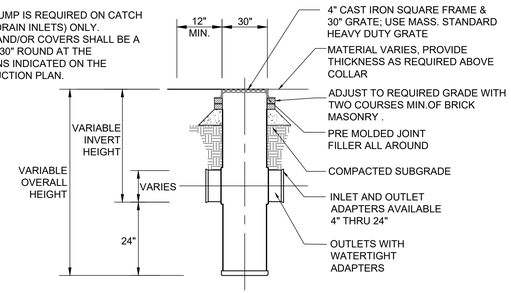

5 PVC MANHOLE CATCH BASIN

SCALE: N.T.S.

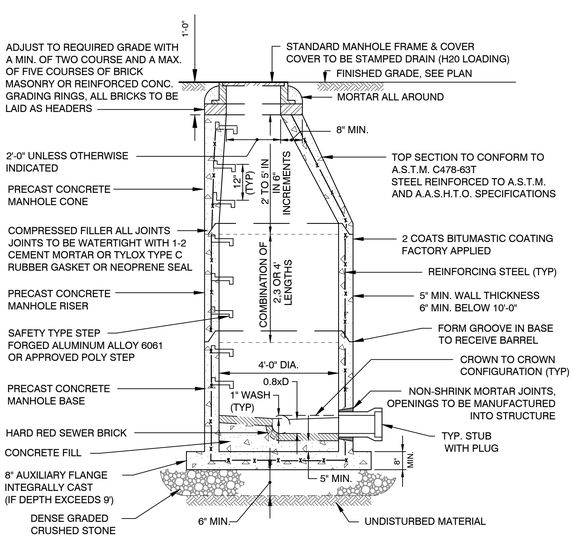

6 SEWER DRAIN MANHOLE

SCALE: N.T.S.

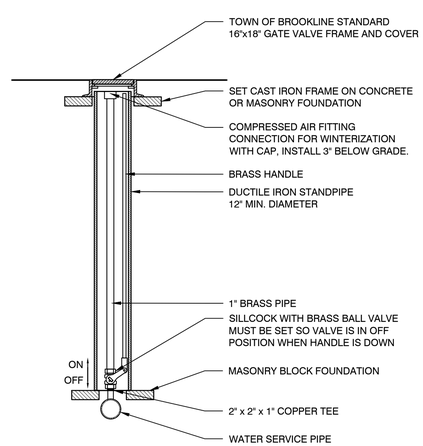

7 BLOWOUT VALVE

SCALE: N.T.S.

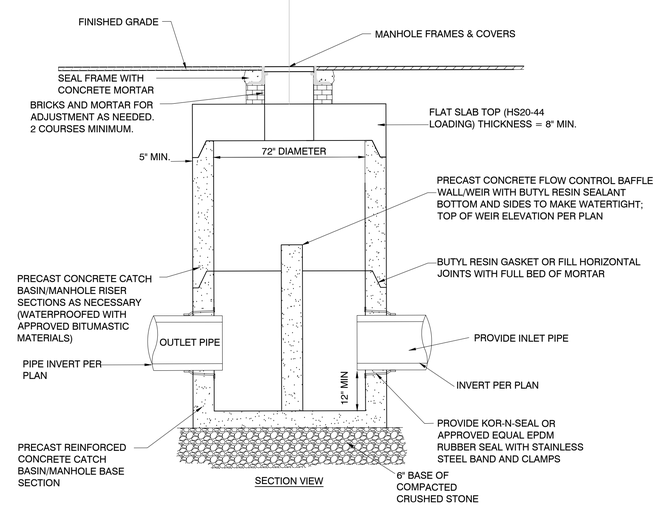

8 OUTLET CONTROL STRUCTURE

SCALE: N.T.S.

Project:

TOWN OF BROOKLINE, MA

CYPRESS STREET PLAYGROUND

Weston & Sampson

85 Devonshire Street,
3rd Floor, Boston, MA 02109
617.412.4480 800.SAMPSON
www.westonandsampson.com

Consultants:

Revisions:

No.	Date	Description

Seal:

Issued For:

BIDDING DOCUMENTS

Scale:	AS SHOWN
Date:	MAY 26, 2020
Drawn By:	LR, EB, HC
Reviewed By:	BMK
Approved By:	ERB
W&S Project No:	2190095
W&S File No:	

Drawing Title:

DETAILS 2- CIVIL DETAILS

Sheet Number:

L8.01

COPYRIGHT 2020 WESTON & SAMPSON

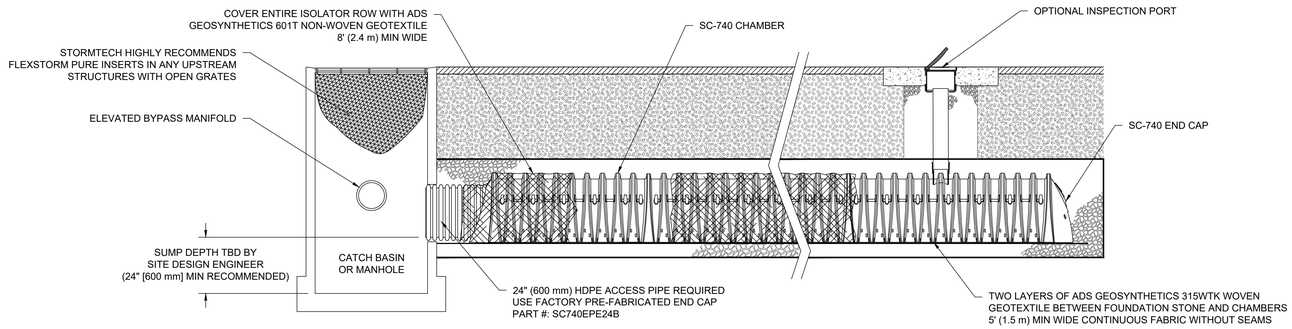

SC-740 ISOLATOR ROW DETAIL
NTS

INSPECTION & MAINTENANCE

STEP 1) INSPECT ISOLATOR ROW FOR SEDIMENT
- A. INSPECTION PORTS (IF PRESENT)
  - A.1. REMOVE/OPEN LID ON NYLOPLAST INLINE DRAIN
  - A.2. REMOVE AND CLEAN FLEXSTORM FILTER IF INSTALLED
  - A.3. USING A FLASHLIGHT AND STADIA ROD, MEASURE DEPTH OF SEDIMENT AND RECORD ON MAINTENANCE LOG
  - A.4. LOWER A CAMERA INTO ISOLATOR ROW FOR VISUAL INSPECTION OF SEDIMENT LEVELS (OPTIONAL)
  - A.5. IF SEDIMENT IS AT, OR ABOVE, 3" (80 mm) PROCEED TO STEP 2. IF NOT, PROCEED TO STEP 3.
- B. ALL ISOLATOR ROWS
  - B.1. REMOVE COVER FROM STRUCTURE AT UPSTREAM END OF ISOLATOR ROW
  - B.2. USING A FLASHLIGHT, INSPECT DOWN THE ISOLATOR ROW THROUGH OUTLET PIPE
    - i) MIRRORS ON POLES OR CAMERAS MAY BE USED TO AVOID A CONFINED SPACE ENTRY
    - ii) FOLLOW OSHA REGULATIONS FOR CONFINED SPACE ENTRY IF ENTERING MANHOLE
  - B.3. IF SEDIMENT IS AT, OR ABOVE, 3" (80 mm) PROCEED TO STEP 2. IF NOT, PROCEED TO STEP 3.

STEP 2) CLEAN OUT ISOLATOR ROW USING THE JETVAC PROCESS
- A. A FIXED CULVERT CLEANING NOZZLE WITH REAR FACING SPREAD OF 45" (1.1 m) OR MORE IS PREFERRED
- B. APPLY MULTIPLE PASSES OF JETVAC UNTIL BACKFLUSH WATER IS CLEAN
- C. VACUUM STRUCTURE SUMP AS REQUIRED

STEP 3) REPLACE ALL COVERS, GRATES, FILTERS, AND LIDS; RECORD OBSERVATIONS AND ACTIONS.

STEP 4) INSPECT AND CLEAN BASINS AND MANHOLES UPSTREAM OF THE STORMTECH SYSTEM.

NOTES

1. INSPECT EVERY 6 MONTHS DURING THE FIRST YEAR OF OPERATION. ADJUST THE INSPECTION INTERVAL BASED ON PREVIOUS OBSERVATIONS OF SEDIMENT ACCUMULATION AND HIGH WATER ELEVATIONS.
2. CONDUCT JETTING AND VACTORING ANNUALLY OR WHEN INSPECTION SHOWS THAT MAINTENANCE IS NECESSARY.

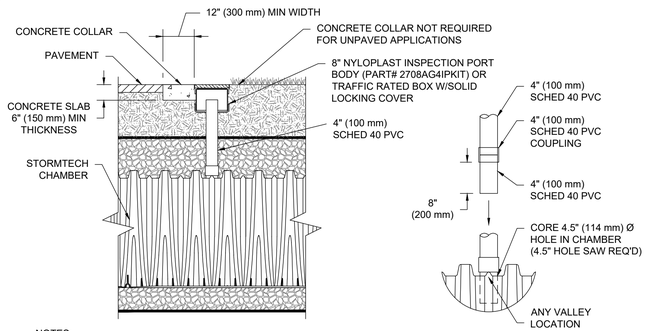

NOTES:
1. INSPECTION PORTS MAY BE CONNECTED THROUGH ANY CHAMBER CORRUGATION VALLEY.
2. ALL SCHEDULE 40 FITTINGS TO BE SOLVENT CEMENTED (4" PVC NOT PROVIDED BY ADS).

4" PVC INSPECTION PORT DETAIL
NTS

CONNECTION DETAIL
NTS

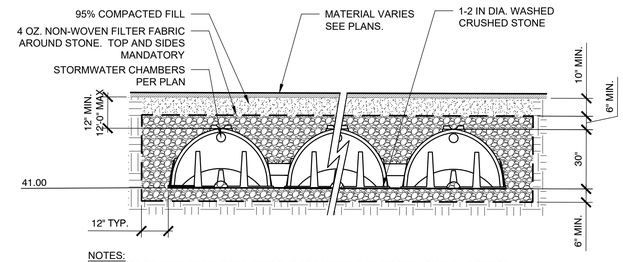

NOTES:
1. REFER TO MANUFACTURERS CURRENT RECOMMENDED INSTALLATION GUIDELINES.
2. ALL CHAMBERS MUST BE INSTALLED IN ACCORDANCE WITH ALL APPLICABLE LOCAL, STATE AND FEDERAL REGULATIONS.
3. PROVIDE A 6" INSPECTION PORT ON THE ENDS OF EACH ROW (2 PER ROW) PER MANUFACTURER DETAILS.
4. THE FRAME AND COVER SHALL BE SET A MINIMUM OF 6" BELOW GRADE.

2 STORMWATER INFILTRATION SYSTEM
SCALE: N.T.S.

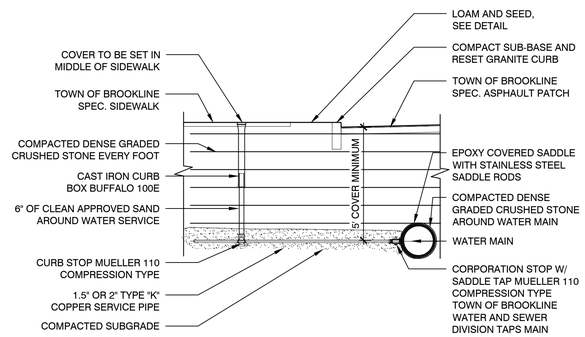

1 ISOLATOR ROW
SCALE: N.T.S.

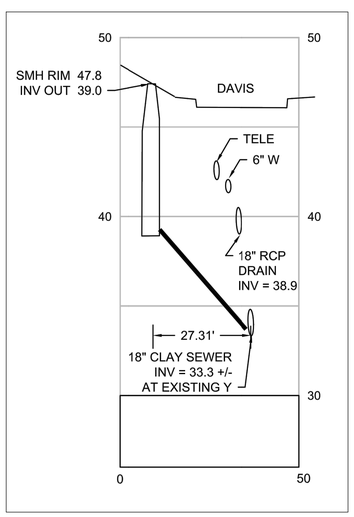

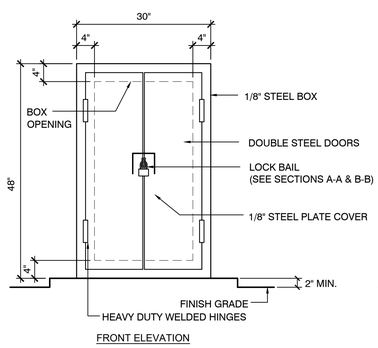

FRONT ELEVATION

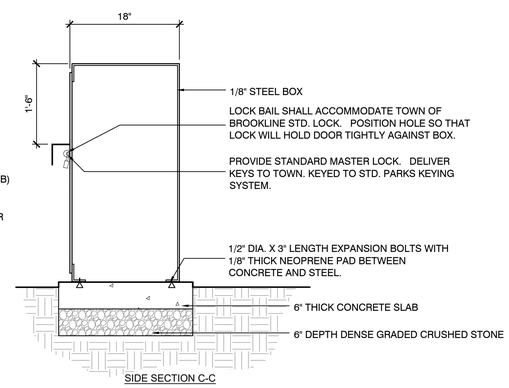

SIDE SECTION C-C

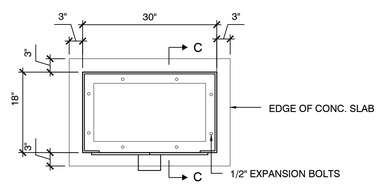

PLAN

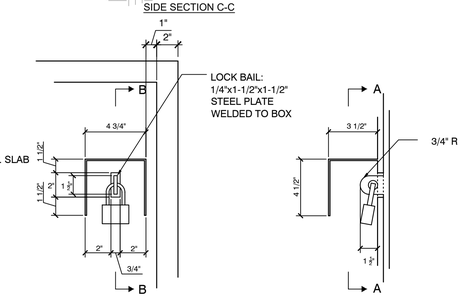

SECTION A-A

SECTION B-B

3 WATER SERVICE
SCALE: N.T.S.

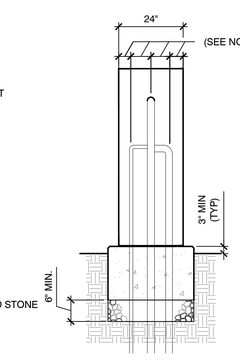

SIDE ELEVATION

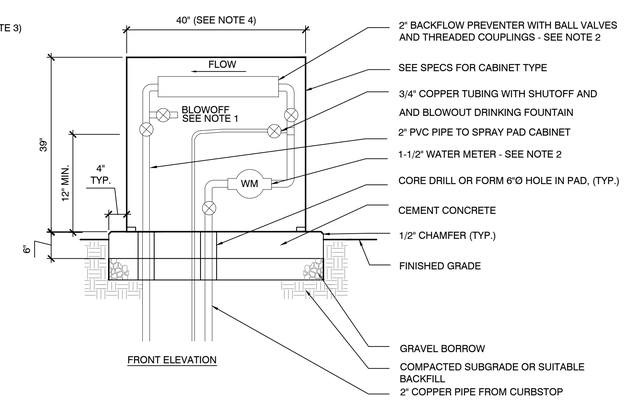

FRONT ELEVATION

NOTES:
1. INSTALL A BRASS BLOWOFF FITTING AND VALVE ON THE OUTFLOW SIDE OF THE BACKFLOW PREVENTION DEVICE TO WINTERIZE THE WATER PLAY FEATURES AS REQUIRED.
2. THE BACKFLOW PREVENTER & METER SHALL BE INSTALLED WITH UNIONS, HANGERS, SUPPORTS AND ALL OTHER APPROPRIATE FITTINGS, IN ORDER TO EASILY REMOVE THE DEVICE FOR SERVICE AND TO MEET ALL APPLICABLE PLUMBING CODES. CONTRACTOR SHALL SUBMIT METHOD OF SUPPORTING AND BRACING THE BACKFLOW PREVENTER & METER IN THE CABINET. 1-1/2" WATER METER TO BE SUPPLIED BY THE TOWN.
3. CONFIRM LAYOUT AND ALIGNMENT REQUIREMENTS FOR ALL PIPING, FITTINGS, VALVES, METER, AND BACKFLOW PREVENTER WITH TOWN OF BROOKLINE PLUMBING INSPECTOR PRIOR TO INSTALLATION.
4. CABINET SIZE SHOWN IS INFORMATIONAL ONLY. CONTACTOR SHALL CONFIRM CABINET SIZE ADEQUATELY HOUSES ALL PIPING, BLOW OFFS AND VALVES, BACKFLOW PREVENTERS, WATER METER AND MEETS ALL APPLICABLE CODES.

4 SEWER CONNECTION AT DAVIS AVENUE
SCALE: N.T.S.

5 SPRAY DECK CONTROLLER CABINET AND BACK FLOW PREVENTER CABINET
SCALE: N.T.S.

Project:
TOWN OF BROOKLINE, MA

CYPRESS STREET PLAYGROUND

Weston & Sampson
85 Devonshire Street,
3rd Floor, Boston, MA 02109
617.412.4480 800.SAMPSON
www.westonandsampson.com

Consultants:

Revisions:

No.	Date	Description

Seal:

Issued For:
BIDDING DOCUMENTS

Scale:	AS SHOWN
Date:	MAY 26, 2020
Drawn By:	LR, EB, HC
Reviewed By:	BMK
Approved By:	ERB
W&S Project No:	2190095
W&S File No:	

Drawing Title:
DETAILS 3- CIVIL DETAILS

Sheet Number:
L8.02

COPYRIGHT 2020 WESTON & SAMPSON

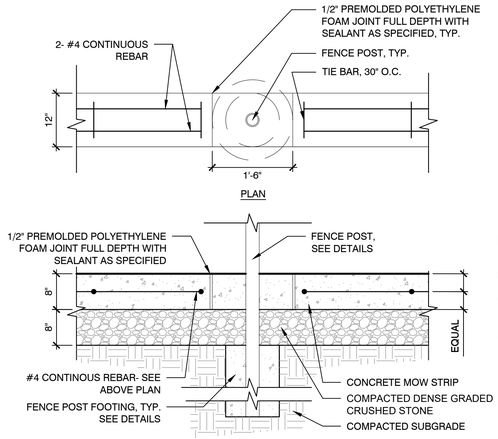

NOTES:
1. MOW STRIP CORNERS ADJACENT TO WALLS AND CURBS SHALL BE SQUARE TO ENSURE SMOOTH INTERFACE BETWEEN MATERIALS.
2. MOW STRIP CORNERS ADJACENT TO PLANTING BED OR LAWN AREAS SHALL HAVE 1/2" CHAMFER.
3. CONTRACTOR SHALL PROVIDE $\frac{1}{2}$" PRE-MOLDED POLYETHYLENE FOAM EXPANSION JOINT, FULL DEPTH WITH SEALANT AS SPECIFIED AT FENCE POSTS UNLESS OTHERWISE NOTED.
4. SEE CRITICAL ROOT ZONE NOTE ON SITE DEMOLITION AND PREPARATION PLAN.

1 CONCRETE MOW CURB AT FENCE
SCALE: N.T.S.

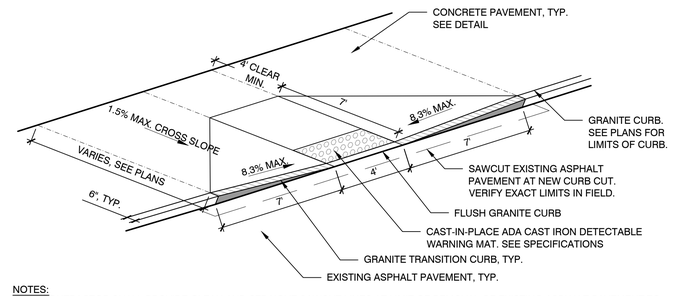

NOTES:
1. CONTRACTOR SHALL PROVIDE CLEAN AND STRAIGHT SAWCUT LINES AT LIMIT OF REMOVAL OF EXISTING ASPHALT PAVEMENT TO REMAIN. CONTRACTOR SHALL VERIFY LIMITS OF EXISTING ASPHALT PAVEMENT REMOVAL PRIOR TO COMMENCING DEMOLITION.
2. CONTRACTOR SHALL REMOVE AND REPLACE ASPHALT PAVEMENT, GRAVEL BORROW, AND SUBGRADE NECESSARY TO CONSTRUCT A CLEAN, SMOOTH TRANSITION AT ADA CURB CUT.

2 ADA CURB CUT
SCALE: N.T.S.

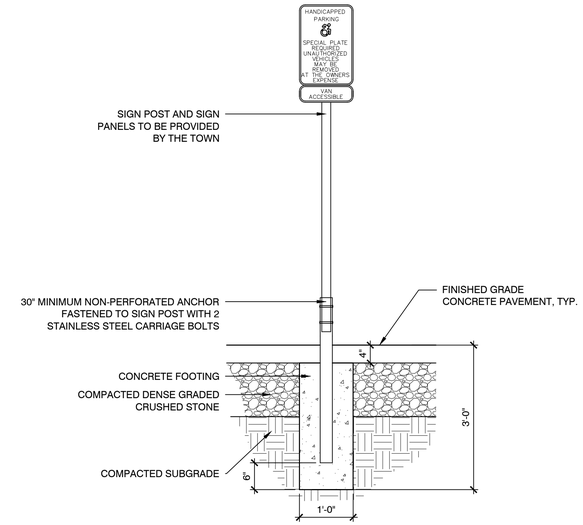

3 ACCESSIBLE PARKING SPACE SIGN
SCALE: N.T.S.

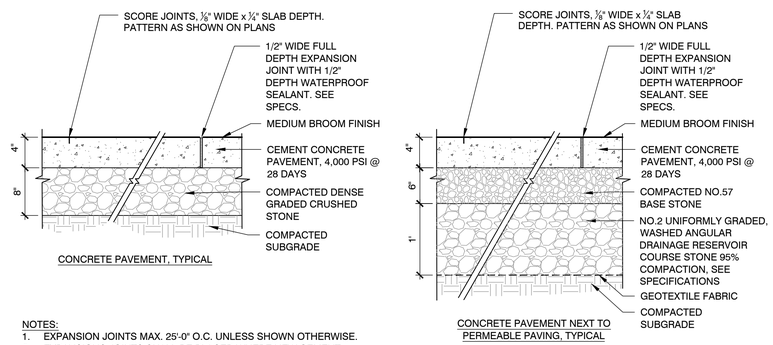

NOTES:
1. EXPANSION JOINTS MAX. 25'-0" O.C. UNLESS SHOWN OTHERWISE.
2. EXPANSIONS JOINTS SHALL BE PLACED WHERE NEW CEMENT CONCRETE PAVEMENT MEETS EXISTING PAVEMENT OR WALLS TO REMAIN.
3. ALL SCORE JOINTS SHALL BE SAW CUT WITHIN 24 HOURS OF PLACEMENT.

4 CONCRETE PAVEMENT
SCALE: N.T.S.

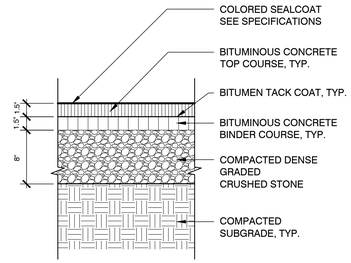

5 BITUMINOUS CONCRETE PAVEMENT
SCALE: N.T.S.

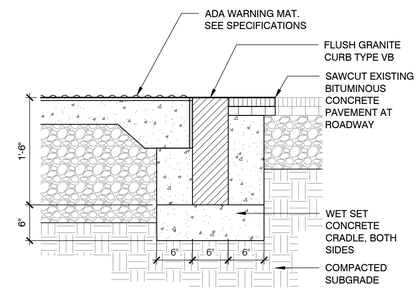

6 FLUSH GRANITE CURB
SCALE: N.T.S.

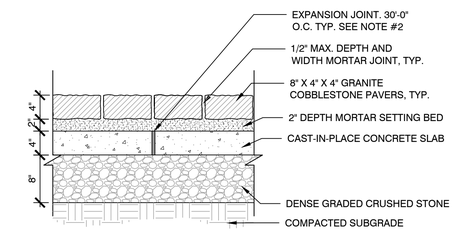

NOTES:
1. COBBLESTONES SHALL BE SET IN A RUNNING BOND PATTERN PERPENDICULAR TO ADA RAMP.
2. CONTRACTOR SHALL PROVIDE 1/2" EXPANSION JOINTS SPACED AT 30'-0" O.C.

7 GRANITE COBBLESTONE PAVERS
SCALE: N.T.S.

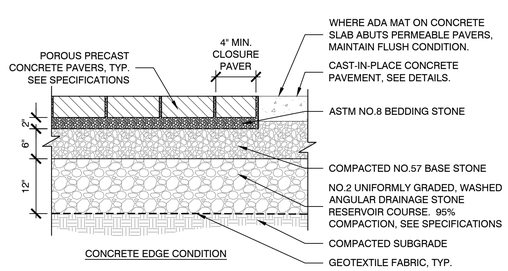

8 POROUS PRECAST CONCRETE PAVERS
SCALE: N.T.S.

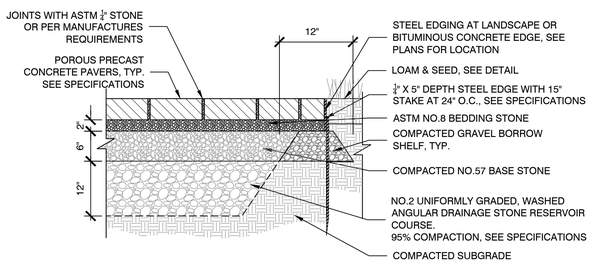

9 POROUS PRECAST CONCRETE PAVERS AT LAWN
SCALE: N.T.S.

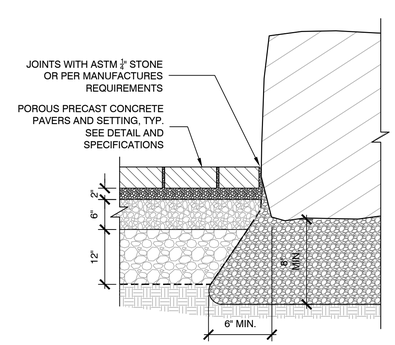

10 POROUS PRECAST CONCRETE PAVERS AT GRANITE BLOCK
SCALE: N.T.S.

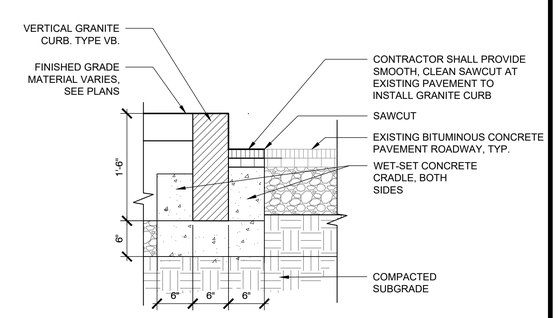

11 VERTICAL GRANITE CURB
SCALE: N.T.S.

Project:
TOWN OF BROOKLINE, MA
CYPRESS STREET PLAYGROUND

Weston & Sampson
85 Devonshire Street,
3rd Floor, Boston, MA 02109
617.412.4480 800.SAMPSON
www.westonandsampson.com

Consultants:

Revisions:

No.	Date	Description

Seal:

Issued For:
BIDDING DOCUMENTS

Scale:	AS SHOWN
Date:	MAY 26, 2020
Drawn By:	LR, EB, HC
Reviewed By:	BMK
Approved By:	ERB
W&S Project No:	2190095
W&S File No:	

Drawing Title:
DETAILS 4- PAVEMENT DETAILS

Sheet Number:
L8.03

COPYRIGHT 2020 WESTON & SAMPSON

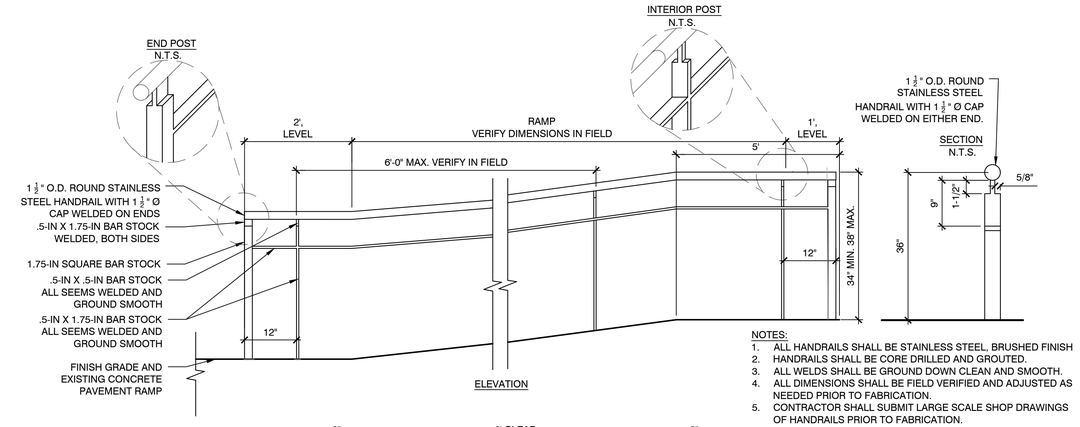

NOTES:
1. ALL HANDRAILS SHALL BE STAINLESS STEEL, BRUSHED FINISH
2. HANDRAILS SHALL BE CORE DRILLED AND GROUTED.
3. ALL WELDS SHALL BE GROUND DOWN CLEAN AND SMOOTH.
4. ALL DIMENSIONS SHALL BE FIELD VERIFIED AND ADJUSTED AS NEEDED PRIOR TO FABRICATION.
5. CONTRACTOR SHALL SUBMIT LARGE SCALE SHOP DRAWINGS OF HANDRAILS PRIOR TO FABRICATION.

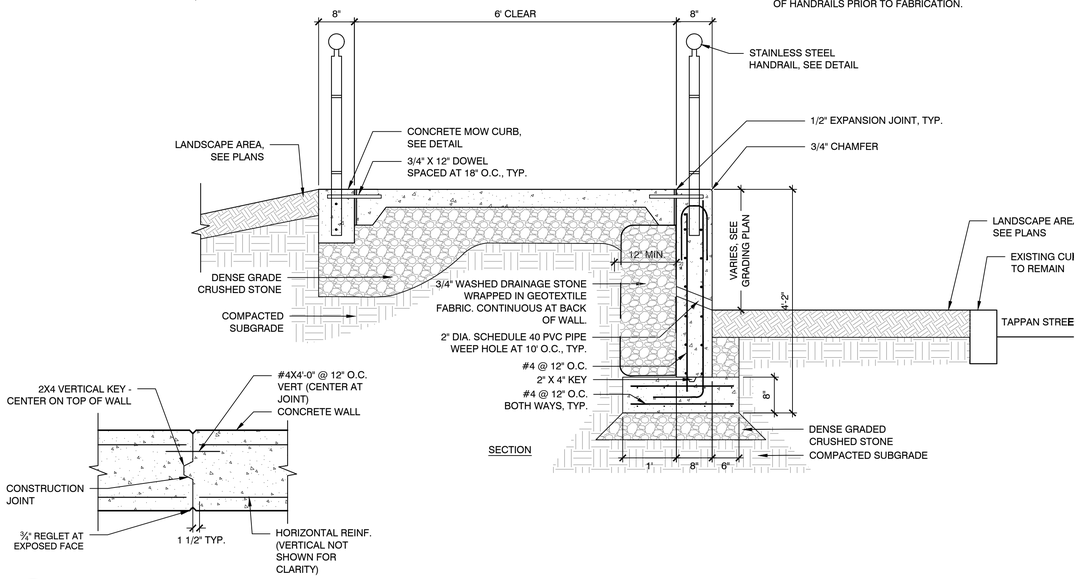

1 ADA RAMP WITH STAINLESS STEEL HANDRAIL

SCALE: N.T.S.

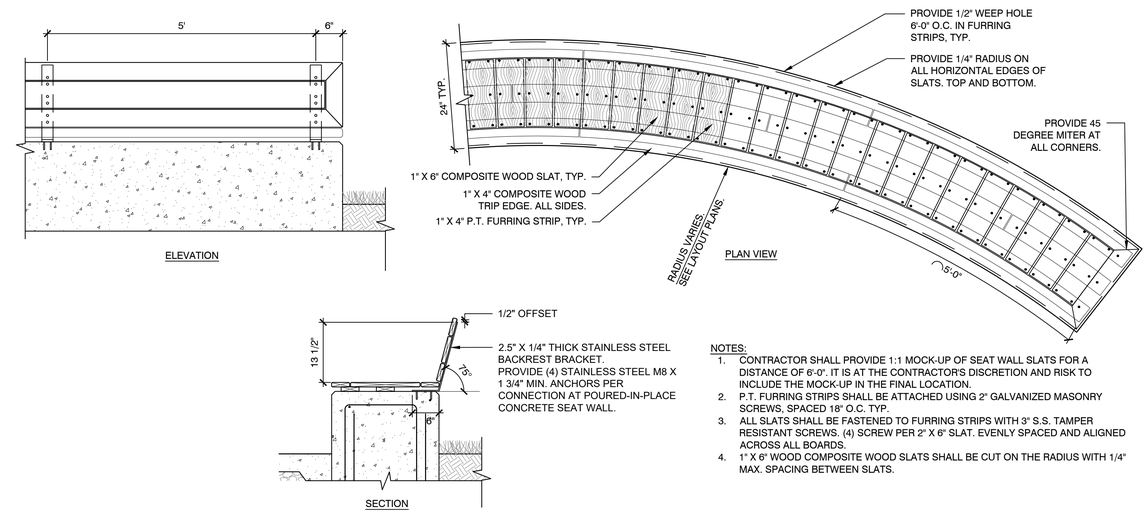

NOTES:
1. CONTRACTOR SHALL PROVIDE 1:1 MOCK-UP OF SEAT WALL SLATS FOR A DISTANCE OF 6'-0". IT IS AT THE CONTRACTOR'S DISCRETION AND RISK TO INCLUDE THE MOCK-UP IN THE FINAL LOCATION.
2. P.T. FURRING STRIPS SHALL BE ATTACHED USING 2" GALVANIZED MASONRY SCREWS, SPACED 18" O.C. TYP.
3. ALL SLATS SHALL BE FASTENED TO FURRING STRIPS WITH 3" S.S. TAMPER RESISTANT SCREWS. (4) SCREW PER 2" X 6" SLAT. EVENLY SPACED AND ALIGNED ACROSS ALL BOARDS.
4. 1" X 6" WOOD COMPOSITE WOOD SLATS SHALL BE CUT ON THE RADIUS WITH 1/4" MAX. SPACING BETWEEN SLATS.

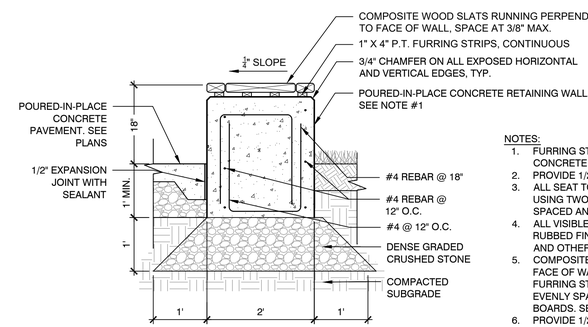

NOTES:
1. FURRING STRIPS SHALL BE ATTACHED USING 2" GALVANIZED CONCRETE SCREWS, EVERY 24" O.C.
2. PROVIDE 1/2" GAP BETWEEN ENDS OF FURRING STRIP, 5' O.C. TYP.
3. ALL SEAT TOP BOARDS TO BE FASTENED TO FURRING BOARDS USING TWO (2) 1 3/4" S.S. TAMPER RESISTANT SCREWS, EVENLY SPACED AND ACCURATELY ALIGNED ACROSS ALL BOARDS.
4. ALL VISIBLE SURFACES OF CONCRETE WALLS SHALL BE SMOOTH RUBBED FINISH. REMOVE AND OR FILL ALL BUGHOLES, FORM TIES AND OTHER IMPERFECTIONS ON ALL VISIBLE SURFACES.
5. COMPOSITE WOOD SLAT BENCH TOP RUNS PERPENDICULAR TO FACE OF WALL. SEE DETAIL. ALL SLATS SHALL BE FASTENED TO FURRING STRIPS USING (4) 3" S.S. TAMPER RESISTANT SCREWS, EVENLY SPACES AND ACCURATELY ALIGNED ACROSS ALL BOARDS. SEE DETAIL.
6. PROVIDE 1/2" GAP BETWEEN FURRING STRIPS EVERY 6'-0" O.C. TYP.
7. COMPOSITE WOOD SLATS SHALL BE SPACED AT 1/4" MAX. BETWEEN SLATS.

2 POURED-IN-PLACE CONCRETE SEATWALL WITH COMPOSITE WOOD BENCH SEAT TOP AND BACK OPTION

SCALE: N.T.S.

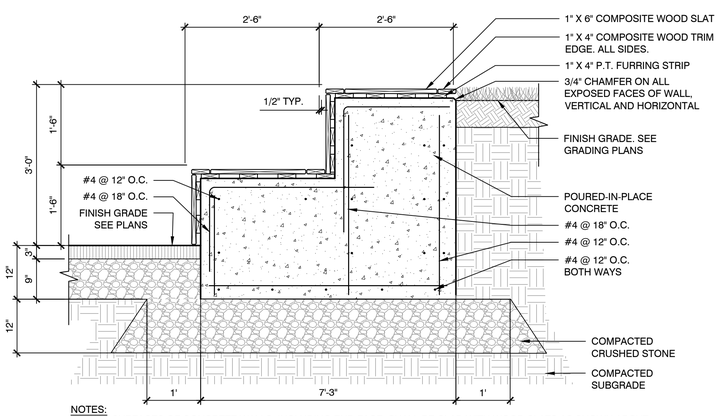

NOTES:
1. ALL SURFACES OF CONCRETE WALLS, INCLUDING END FACE, SHALL BE CLAD WITH WOOD SLATS AS SHOWN ABOVE.
2. COMPOSITE WOOD SLAT BENCH TOP RUNS PERPENDICULAR TO FACE OF WALL. SEE DETAIL. ALL SLATS SHALL BE FASTENED TO FURRING STRIPS USING (4) 3" S.S. TAMPER RESISTANT SCREWS, EVENLY SPACED AND ACCURATELY ALIGNED ACROSS ALL BOARDS. SEE DETAIL.
3. PROVIDE 1/2" GAP BETWEEN P.T. FURRING STRIPS EVERY 6'-0" O.C. TYP.
4. COMPOSITE WOOD SLATS SHALL BE SPACED AT 1/4" MAX. BETWEEN SLATS.

3 TERRACED SEATING AT BASKETBALL COURT

SCALE: N.T.S.

NOTES:
1. CONTRACTOR SHALL PROVIDE 1:1 MOCK-UP OF TWO-TIER BLEACHER SEATWALL SLATS FOR A DISTANCE OF 6'-0". IT IS AT THE CONTRACTOR'S DISCRETION AND RISK TO INCLUDE THE MOCK-UP IN THE FINAL LOCATION.
2. P.T. FURRING STRIPS SHALL BE ATTACHED USING 2" GALVANIZED MASONRY SCREWS SPACED AT 18" O.C. TYP.
3. ALL SLATS SHALL BE FASTENED TO FURRING STRIPS WITH 3" S.S. TAMPER RESISTANT SCREWS. (4) SCREWS PER 1" X 6" SLAT, EVENLY SPACED AND ALIGNED ACROSS ALL BOARDS.
4. 1" X 6" WOOD COMPOSITE WOOD SLATS SHALL HAVE 3/8" MAX. SPACING BETWEEN SLATS.

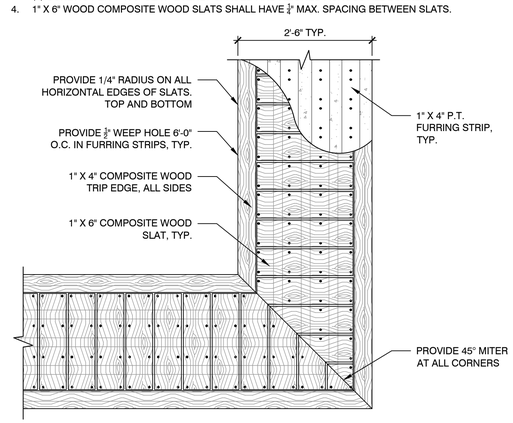

PLAN VIEW AT 90° CORNER

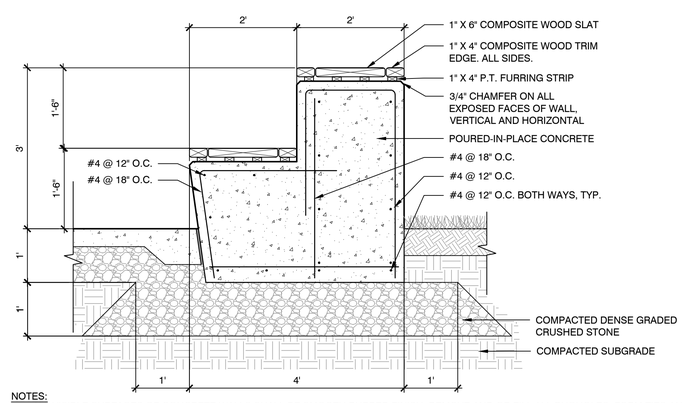

NOTES:
1. ALL VISIBLE SURFACES OF CONCRETE WALLS SHALL BE SMOOTH RUBBED FINISH. REMOVE AND OR FILL ALL BUGHOLES, FORM TIES AND OTHER IMPERFECTIONS ON ALL VISIBLE SURFACES.
2. COMPOSITE WOOD SLAT BENCH TOP RUNS PERPENDICULAR TO FACE OF WALL. SEE DETAIL. ALL SLATS SHALL BE FASTENED TO FURRING STRIPS USING (4) 3" S.S. TAMPER RESISTANT SCREWS, EVENLY SPACES AND ACCURATELY ALIGNED ACROSS ALL BOARDS. SEE DETAIL.
3. PROVIDE 1/2" GAP BETWEEN FURRING STRIPS EVERY 6'-0" O.C. TYP.
4. COMPOSITE WOOD SLATS SHALL BE SPACED AT 1/4" MAX. BETWEEN SLATS.

4 TERRACED SEATING AT SOCCER FIELD

SCALE: N.T.S.

Project:

TOWN OF BROOKLINE, MA

CYPRESS STREET PLAYGROUND

Weston & Sampson

85 Devonshire Street,
3rd Floor, Boston, MA 02109
617.412.4480 800.SAMPSON
www.westonandsampson.com

Consultants:

Revisions:

No.	Date	Description

Seal:

Issued For:

BIDDING DOCUMENTS

Scale:	AS SHOWN
Date:	MAY 26, 2020
Drawn By:	LR, EB, HC
Reviewed By:	BMK
Approved By:	ERB
W&S Project No:	2190095
W&S File No:	

Drawing Title:

DETAILS 5- SEATWALLS & RAMPS

Sheet Number:

L8.04

COPYRIGHT 2020 WESTON & SAMPSON

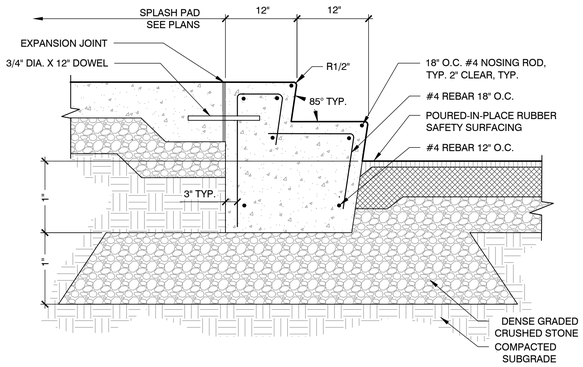

1 TWO RISER REINFORCED CONCRETE STAIR

SCALE: N.T.S.

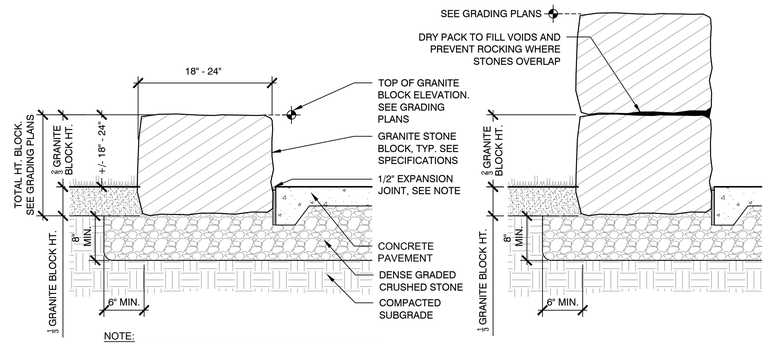

NOTE:
1. JOINT BETWEEN BOULDER AND ADJACENT MATERIAL SHALL NOT EXCEED ½". STRIPPED TOP SHALL BE FILLED WITH POLYMERIC SAND.

2 STONE MASONRY SEAT

SCALE: N.T.S.

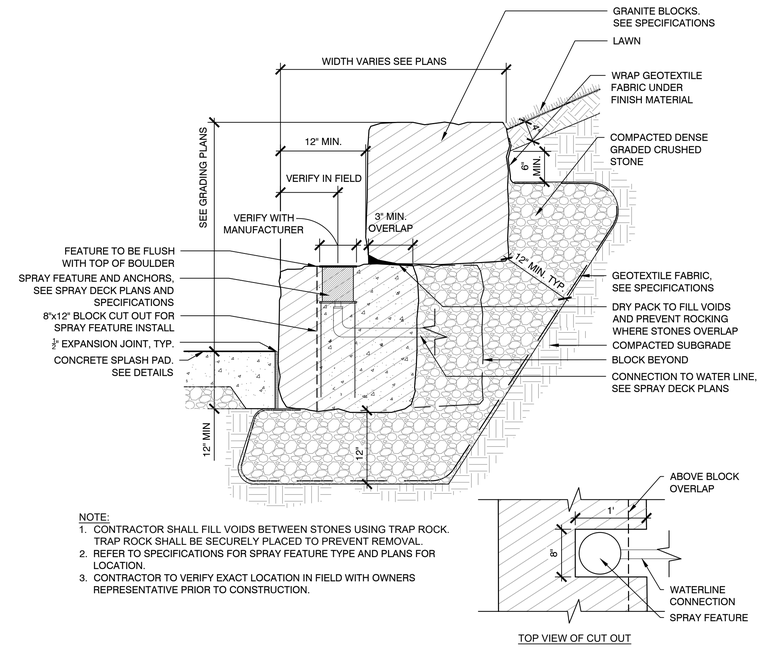

NOTE:
1. CONTRACTOR SHALL FILL VOIDS BETWEEN STONES USING TRAP ROCK. TRAP ROCK SHALL BE SECURELY PLACED TO PREVENT REMOVAL.
2. REFER TO SPECIFICATIONS FOR SPRAY FEATURE TYPE AND PLANS FOR LOCATION.
3. CONTRACTOR TO VERIFY EXACT LOCATION IN FIELD WITH OWNERS REPRESENTATIVE PRIOR TO CONSTRUCTION.

TOP VIEW OF CUT OUT

3 STONE MASONRY WALL AT SPLASH PAD

SCALE: N.T.S.

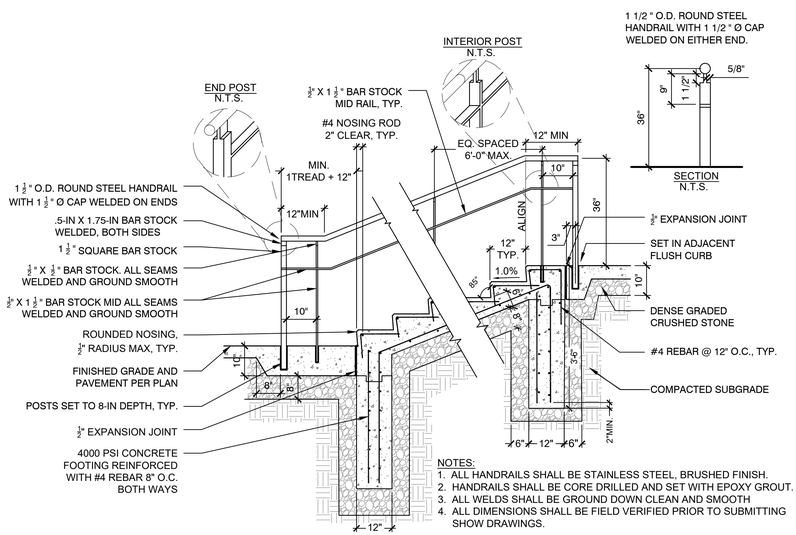

NOTES:
1. ALL HANDRAILS SHALL BE STAINLESS STEEL, BRUSHED FINISH.
2. HANDRAILS SHALL BE CORE DRILLED AND SET WITH EPOXY GROUT.
3. ALL WELDS SHALL BE GROUND DOWN CLEAN AND SMOOTH
4. ALL DIMENSIONS SHALL BE FIELD VERIFIED PRIOR TO SUBMITTING SHOW DRAWINGS.

4 REINFORCED CONCRETE STAIR WITH HANDRAIL

SCALE: N.T.S.

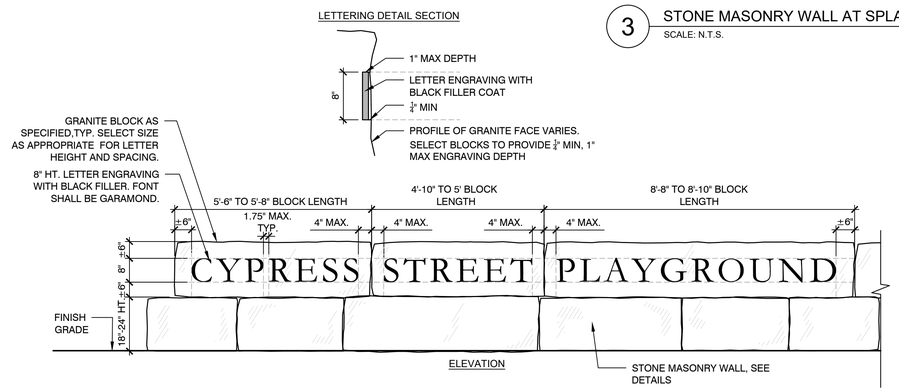

5 PARK SIGN ON STONE MASONRY WALL

SCALE: N.T.S.

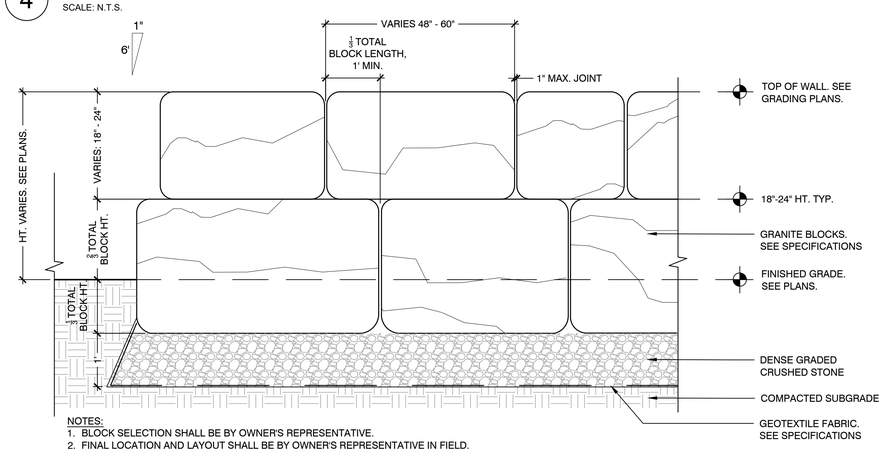

NOTES:
1. BLOCK SELECTION SHALL BE BY OWNER'S REPRESENTATIVE.
2. FINAL LOCATION AND LAYOUT SHALL BE BY OWNER'S REPRESENTATIVE IN FIELD. CONTRACTOR SHALL ASSUME PLACEMENT OF EACH BLOCK A MINIMUM OF 3 TIMES.
3. CONTRACTOR SHALL PROVIDE 6' x 1" BATTER FOR EACH ROW OF STONE.

6 STONE MASONRY WALL (ELEVATION)

SCALE: N.T.S.

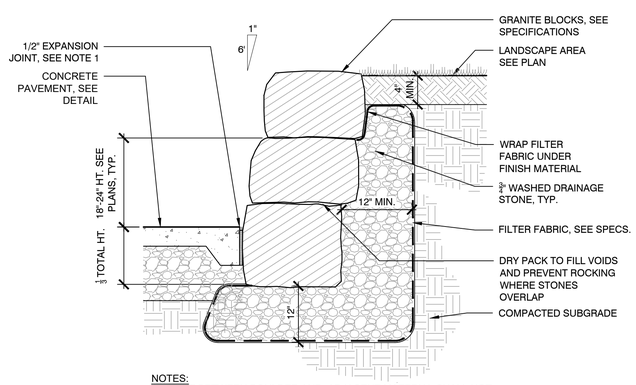

NOTES:
1. JOINT BETWEEN BOULDER AND ADJACENT MATERIAL SHALL NOT EXCEED ½". STRIPPED TOP SHALL BE FILLED WITH POLYMERIC SAND.
2. CONTRACTOR SHALL FILL VOIDS BETWEEN STONES USING TRAP ROCK. TRAP ROCK SHALL BE SECURELY PLACED TO PREVENT REMOVAL.

7 STONE MASONRY WALL (SECTION)

SCALE: N.T.S.

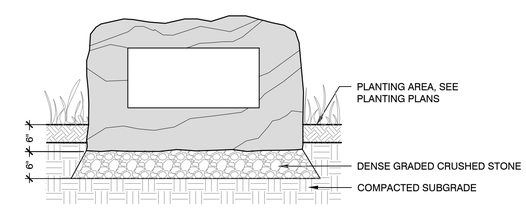

8 RESET COMMEMORATIVE BOULDER

SCALE: N.T.S.

Project:

TOWN OF BROOKLINE, MA

CYPRESS STREET PLAYGROUND

Weston & Sampson

85 Devonshire Street,
3rd Floor, Boston, MA 02109
617.412.4480 800.SAMPSON
www.westonandsampson.com

Consultants:

Revisions:

No.	Date	Description

Seal:

Issued For:

BIDDING DOCUMENTS

Scale:	AS SHOWN
Date:	MAY 26, 2020
Drawn By:	LR, EB, HC
Reviewed By:	BMK
Approved By:	ERB
W&S Project No:	2190095
W&S File No:	

Drawing Title:

DETAILS 6- CONCRETE STAIRS & STONE MASONRY

Sheet Number:

L8.05

COPYRIGHT 2020 WESTON & SAMPSON

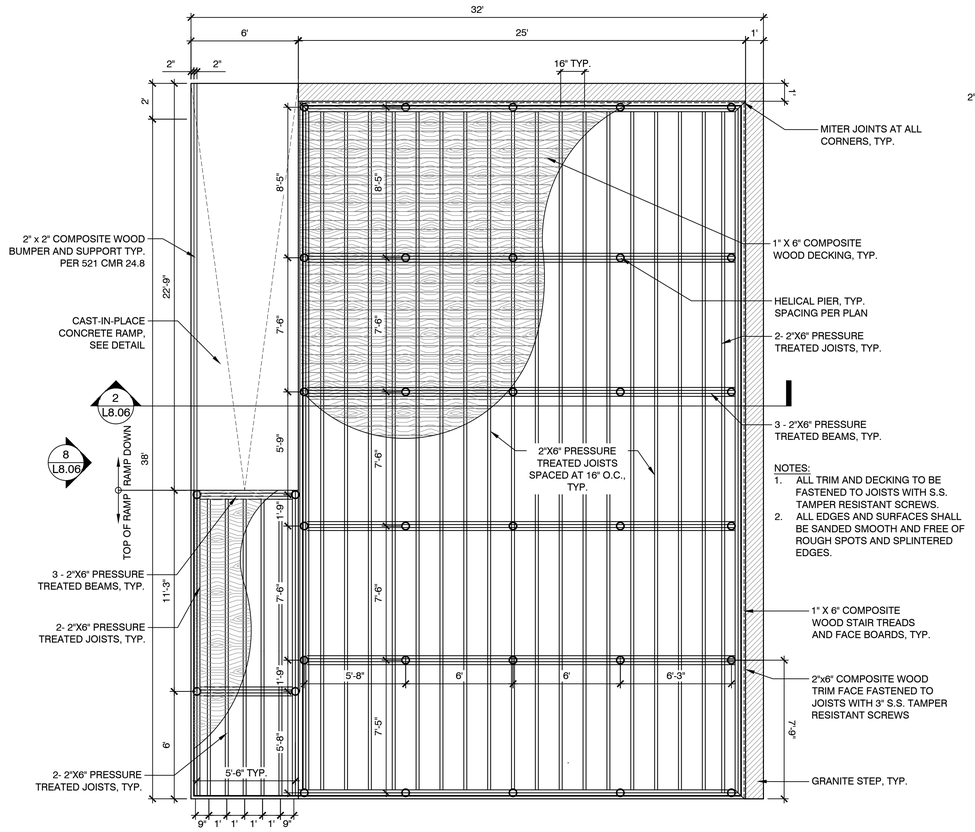

NOTES:
1. ALL TRIM AND DECKING TO BE FASTENED TO JOISTS WITH S.S. TAMPER RESISTANT SCREWS.
2. ALL EDGES AND SURFACES SHALL BE SANDED SMOOTH AND FREE OF ROUGH SPOTS AND SPLINTERED EDGES.

1 COMPOSITE WOOD DECK
SCALE: N.T.S.

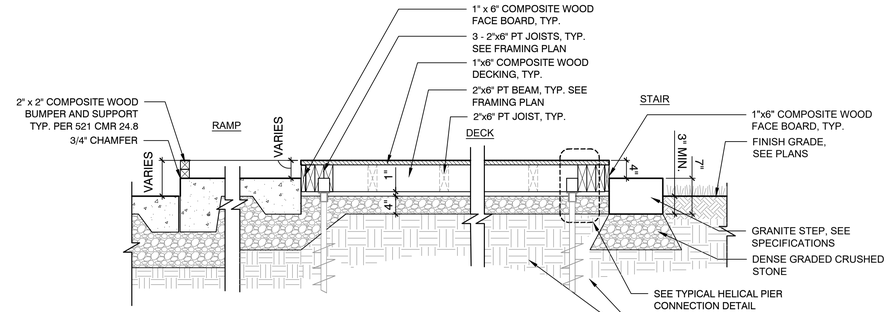

NOTES:
1. MAXIMUM PIER/BEAM SPACING IS 9'-0", SEE FRAMING PLAN.
2. CONTRACTOR SHALL ASSUME 6'-0" HELICAL PIER DEPTH (FROM BOTTOM OF TIMBER BEAM TO THE BOTTOM OF PIER) FOR COMPARATIVE BIDDING PURPOSES ONLY. FINAL DEPTHS SHALL MEET THE PERFORMANCE REQUIREMENTS AS DESCRIBED IN THE SPECIFICATIONS. ANCHORS INSTALLED TO MEET THE SPECIFIED INSTALLATION REQUIREMENTS ARE SUITABLE TO PROVIDE AN ALLOWABLE CAPACITY OF 4.5KIPS ±0.5 KIPS. THE OWNER'S REPRESENTATIVE SHALL OBSERVE INSTALLATION OF HELICAL PIERS TO CONFIRM THE PIERS ARE INSTALLED TO REQUIRED EMBEDMENT DEPTHS AND CAPACITIES.
3. ALL TRIM AND DECKING TO BE FASTENED TO JOISTS WITH S.S. TAMPER RESISTANT SCREWS.

2 COMPOSITE WOOD DECK AND CONCRETE RAMP - SECTION
SCALE: N.T.S.

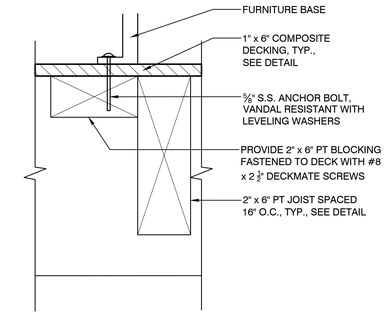

NOTE:
1. ALL SITE FURNISHINGS SHALL BE SURFACE MOUNTED PER MANUFACTURER'S RECOMMENDATIONS.

3 FURNITURE SURFACE MOUNT AT COMPOSITE WOOD DECK
SCALE: N.T.S.

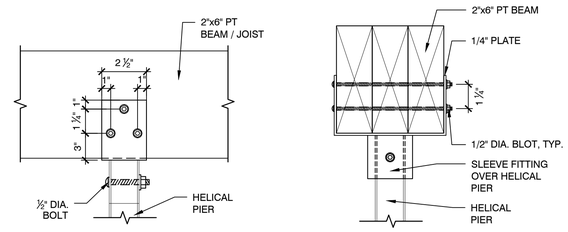

4 TYPICAL HELICAL PIER CONNECTIONS
SCALE: N.T.S.

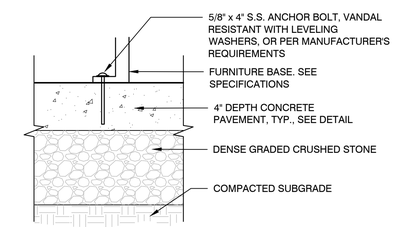

5 FURNITURE SURFACE MOUNT AT CONCRETE
SCALE: N.T.S.

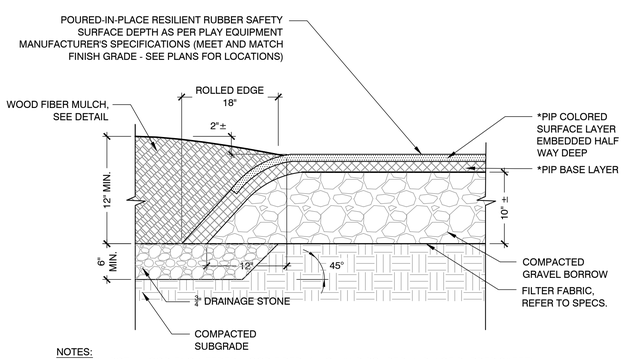

NOTES:
1. PITCH BOTH WOOD ENGINEERED WOOD FIBER MULCH AND POURED-IN-PLACE RUBBER SAFETY SURFACE AS SHOWN ON PLANS.
2. POURED-IN-PLACE RESILIENT RUBBER SURFACE (PIP) BASE LAYER SHALL BE FULL DEPTH OF ROLLED EDGE. COLORED SURFACE LAYER SHALL BE HALF DEPTH AS SHOWN.

6 WOOD FIBER MULCH AT POURED IN PLACE RUBBER SAFETY SURFACING
SCALE: N.T.S.

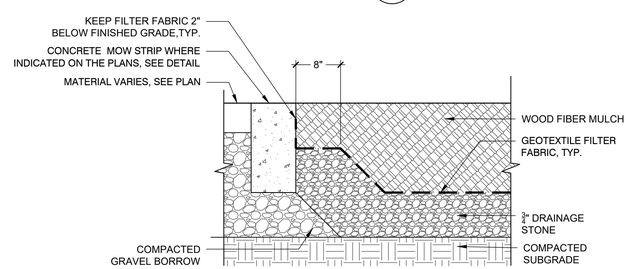

7 WOOD FIBER MULCH
SCALE: N.T.S.

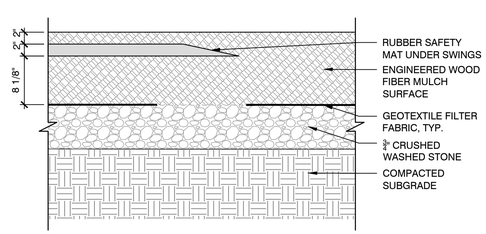

8 RUBBER MAT UNDER SWINGS
SCALE: N.T.S.

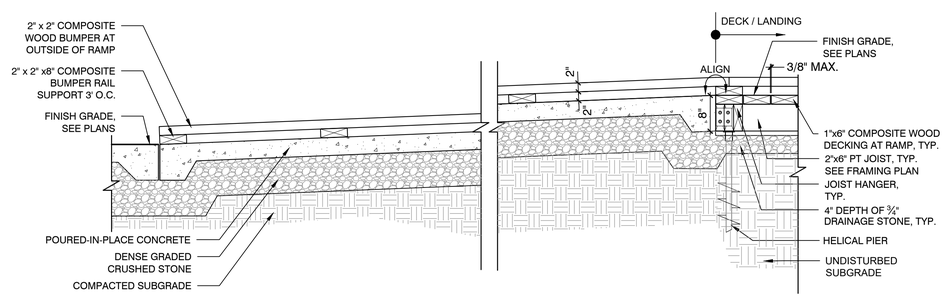

9 CAST-IN-PLACE CONCRETE RAMP AT DECK - ELEVATION
SCALE: N.T.S.

Project:
TOWN OF BROOKLINE, MA

CYPRESS STREET PLAYGROUND

Weston & Sampson
85 Devonshire Street,
3rd Floor, Boston, MA 02109
617.412.4480 800.SAMPSON
www.westonandsampson.com

Consultants:

Revisions:

No.	Date	Description

Seal:

Issued For:
BIDDING DOCUMENTS

Scale:	AS SHOWN
Date:	MAY 26, 2020
Drawn By:	LR, EB, HC
Reviewed By:	BMK
Approved By:	ERB
W&S Project No:	2190095
W&S File No:	

Drawing Title:
DETAILS 7- WOOD DECK & WOOD FIBER MULCH

Sheet Number:
L8.06

COPYRIGHT 2020 WESTON & SAMPSON

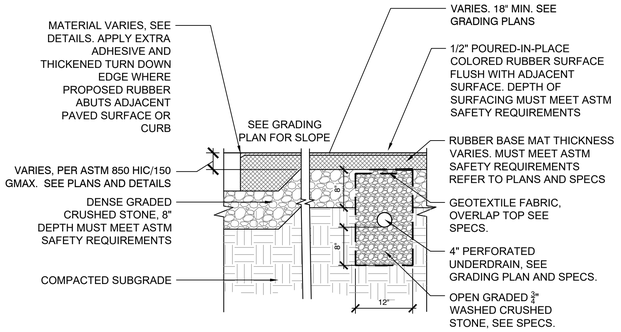

1 POURED-IN-PLACE RUBBER SAFETY SURFACING

SCALE: N.T.S.

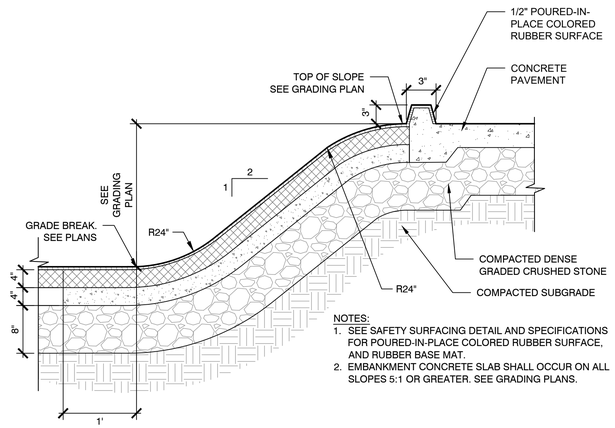

NOTES:
1. SEE SAFETY SURFACING DETAIL AND SPECIFICATIONS FOR POURED-IN-PLACE COLORED RUBBER SURFACE, AND RUBBER BASE MAT.
2. EMBANKMENT CONCRETE SLAB SHALL OCCUR ON ALL SLOPES 5:1 OR GREATER. SEE GRADING PLANS.

2 SLOPED POURED-IN-PLACE RUBBER SAFETY SURFACING - TYPE 1

SCALE: N.T.S.

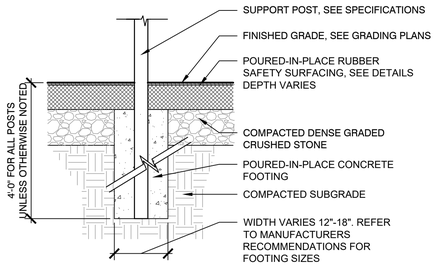

NOTES:
1. FOOTINGS SHALL BE REQUIRED FOR ALL POSTS AND GROUND CONNECTIONS, SEE PLANS.
2. DO NOT BACKFILL FOOTING HOLES UNTIL INSPECTED BY OWNER'S REPRESENTATIVE.

3 PLAY STRUCTURE FOOTING

SCALE: N.T.S.

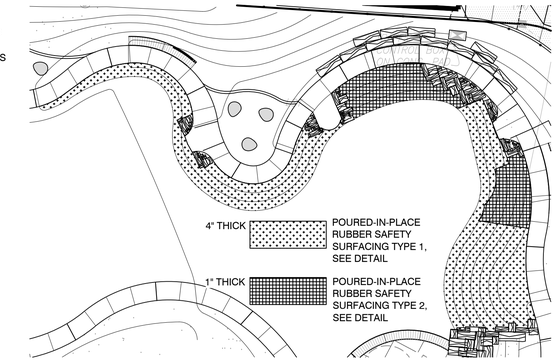

4 POURED-IN-PLACE RUBBER SAFETY SURFACING SLOPE LAYOUT

SCALE: N.T.S.

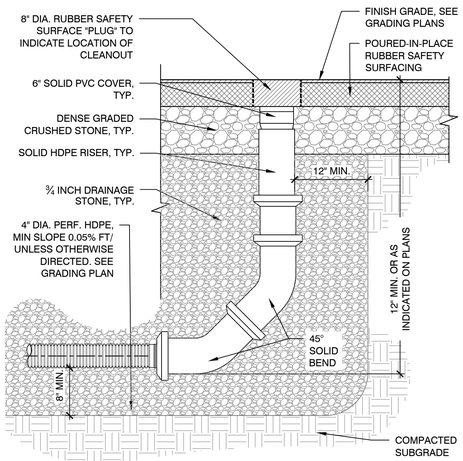

5 CLEANOUT AT POURED-IN-PLACE RUBBER SAFETY SURFACING

SCALE: N.T.S.

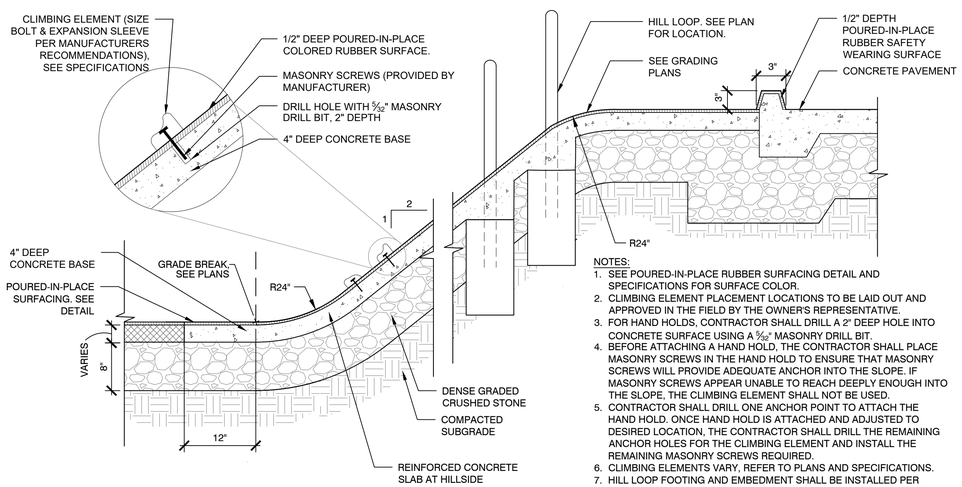

NOTES:
1. SEE POURED-IN-PLACE RUBBER SURFACING DETAIL AND SPECIFICATIONS FOR SURFACE COLOR.
2. CLIMBING ELEMENT PLACEMENT LOCATIONS TO BE LAID OUT AND APPROVED IN THE FIELD BY THE OWNER'S REPRESENTATIVE.
3. FOR HAND HOLDS, CONTRACTOR SHALL DRILL A 2" DEEP HOLE INTO CONCRETE SURFACE USING A 5/32" MASONRY DRILL BIT.
4. BEFORE ATTACHING A HAND HOLD, THE CONTRACTOR SHALL PLACE MASONRY SCREWS IN THE HAND HOLD TO ENSURE THAT MASONRY SCREWS WILL PROVIDE ADEQUATE ANCHOR INTO THE SLOPE. IF MASONRY SCREWS APPEAR UNABLE TO REACH DEEPLY ENOUGH INTO THE SLOPE, THE CLIMBING ELEMENT SHALL NOT BE USED.
5. CONTRACTOR SHALL DRILL ONE ANCHOR POINT TO ATTACH THE HAND HOLD. ONCE HAND HOLD IS ATTACHED AND ADJUSTED TO DESIRED LOCATION, THE CONTRACTOR SHALL DRILL THE REMAINING ANCHOR HOLES FOR THE CLIMBING ELEMENT AND INSTALL THE REMAINING MASONRY SCREWS REQUIRED.
6. CLIMBING ELEMENTS VARY, REFER TO PLANS AND SPECIFICATIONS.
7. HILL LOOP FOOTING AND EMBEDMENT SHALL BE INSTALLED PER MANUFACTURER'S REQUIREMENTS.
8. EMBANKMENT PLAY ELEMENT CONCRETE SLAB SHALL BE LIMITED TO LIMITS OF MANUFACTURER'S USE ZONE ASSOCIATED WITH EACH PLAY ELEMENT. ALL OTHER EMBANKMENT PLAY SURFACES AREAS SHALL CONFORM TO DETAIL 2/L8.06.
9. EMBANKMENT CONCRETE SLAB SHALL OCCUR ON ALL SLOPES 5:1 OR GREATER. SEE GRADING PLANS.

6 CLIMBING SLOPE WITH HAND HOLDS AT POURED-IN-PLACE RUBBER SAFETY SURFACING - TYPE 2

SCALE: N.T.S.

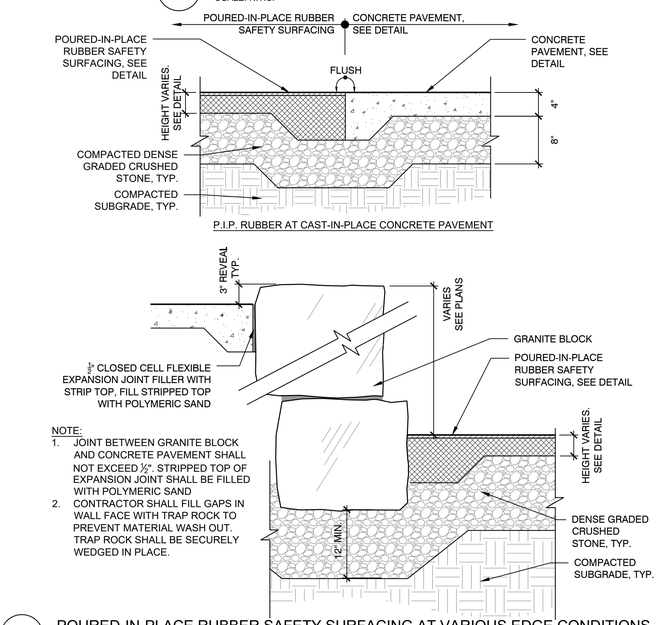

NOTE:
1. JOINT BETWEEN GRANITE BLOCK AND CONCRETE PAVEMENT SHALL NOT EXCEED ½". STRIPPED TOP OF EXPANSION JOINT SHALL BE FILLED WITH POLYMERIC SAND
2. CONTRACTOR SHALL FILL GAPS IN WALL FACE WITH TRAP ROCK TO PREVENT MATERIAL WASH OUT. TRAP ROCK SHALL BE SECURELY WEDGED IN PLACE.

7 POURED-IN-PLACE RUBBER SAFETY SURFACING AT VARIOUS EDGE CONDITIONS

SCALE: N.T.S.

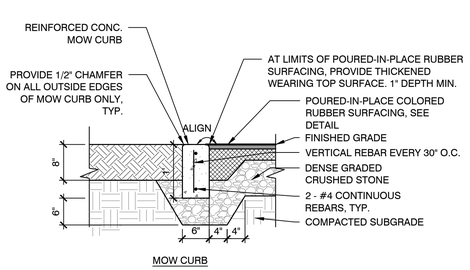

MOW CURB

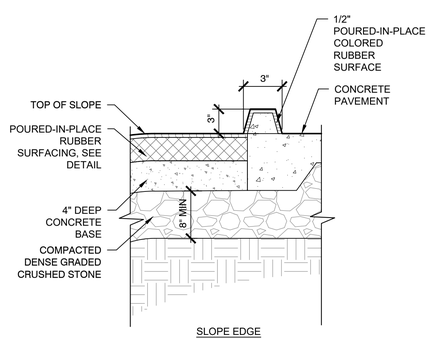

SLOPE EDGE

8 CURBS AT POURED-IN-PLACE RUBBER SAFETY SURFACING

SCALE: N.T.S.

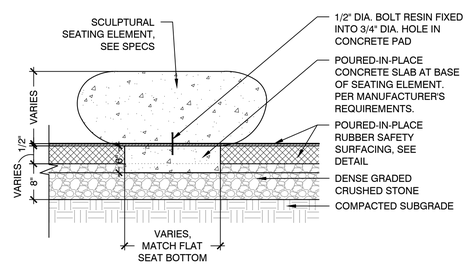

NOTES:
1. SEE POURED-IN-PLACE RUBBER SURFACING DETAIL AND SPECIFICATIONS FOR SURFACE COLOR.
3. FOR SCULPTURAL SEATING ELEMENTS, CONTRACTOR SHALL DRILL 2" DEEP HOLE INTO CONCRETE SLAB USING A 5/32" MASONRY DRILL BIT.
4. BEFORE ATTACHING A SEATING ELEMENT, THE CONTRACTOR SHALL PLACE MASONRY SCREWS INTO THE SEATING ELEMENT TO ENSURE THAT MASONRY SCREWS WILL PROVIDE ADEQUATE ANCHOR TO THE SURFACE.
5. SEATING ELEMENTS VARY, REFER TO PLANS AND SPECIFICATIONS.
6. SEATING ELEMENT PLACEMENT AND LOCATION TO BE LAID OUT AND APPROVED IN THE FIELD BY THE OWNER'S REPRESENTATIVE.

9 SCULPTURAL BENCH

SCALE: N.T.S.

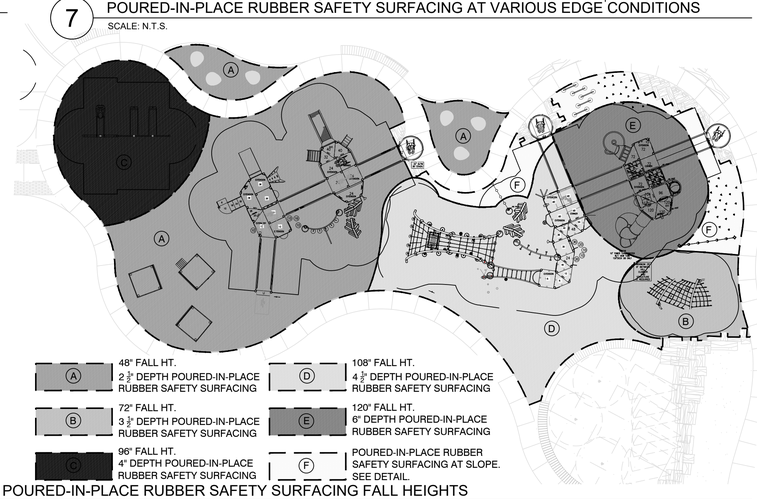

10 POURED-IN-PLACE RUBBER SAFETY SURFACING FALL HEIGHTS

SCALE: N.T.S.

Project:

TOWN OF BROOKLINE, MA

CYPRESS STREET PLAYGROUND

Weston & Sampson

85 Devonshire Street,
3rd Floor, Boston, MA 02109
617.412.4480 800.SAMPSON
www.westonandsampson.com

Consultants:

Revisions:

No.	Date	Description

Seal:

Issued For:

BIDDING DOCUMENTS

Scale:	AS SHOWN
Date:	MAY 26, 2020
Drawn By:	LR, EB, HC
Reviewed By:	BMK
Approved By:	ERB
W&S Project No:	2190095
W&S File No:	

Drawing Title:

DETAILS 8- PLAYGROUND SURFACING

Sheet Number:

L8.07

COPYRIGHT 2020 WESTON & SAMPSON

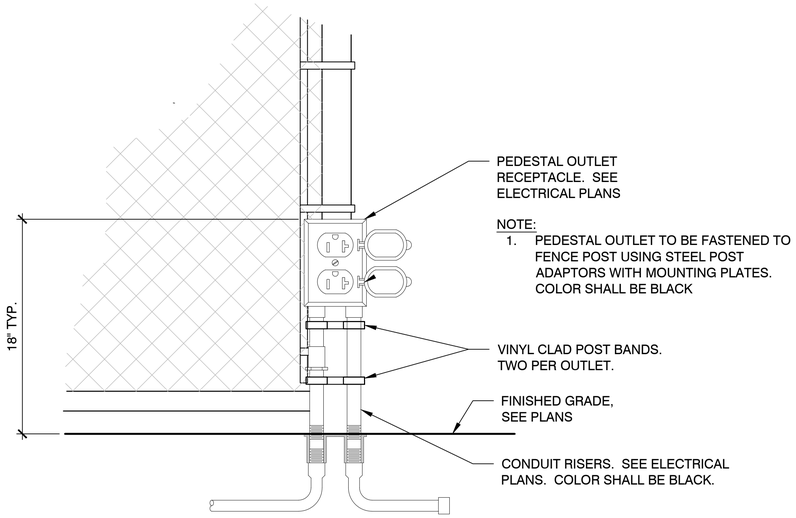

1 ORNAMENTAL PICKET FENCE
SCALE: N.T.S.

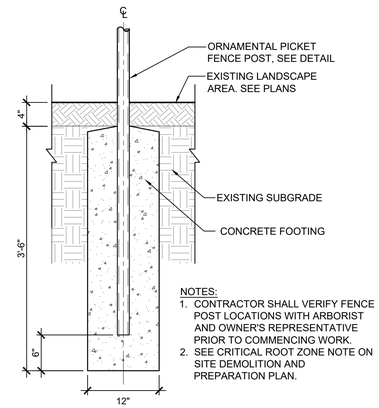

2 FENCE POST FOOTING IN LANDSCAPE
SCALE: N.T.S.

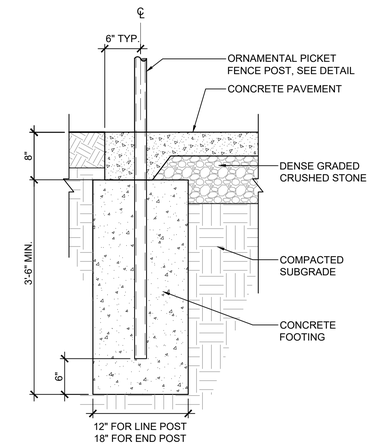

3 FENCE POST FOOTING IN SIDEWALK
SCALE: N.T.S.

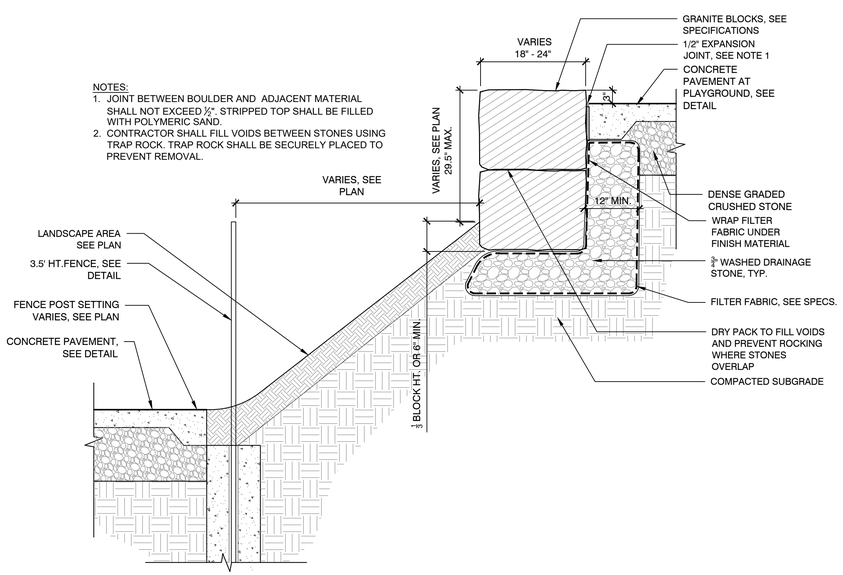

4 STONE MASONRY RETAINING WALL
SCALE: N.T.S.

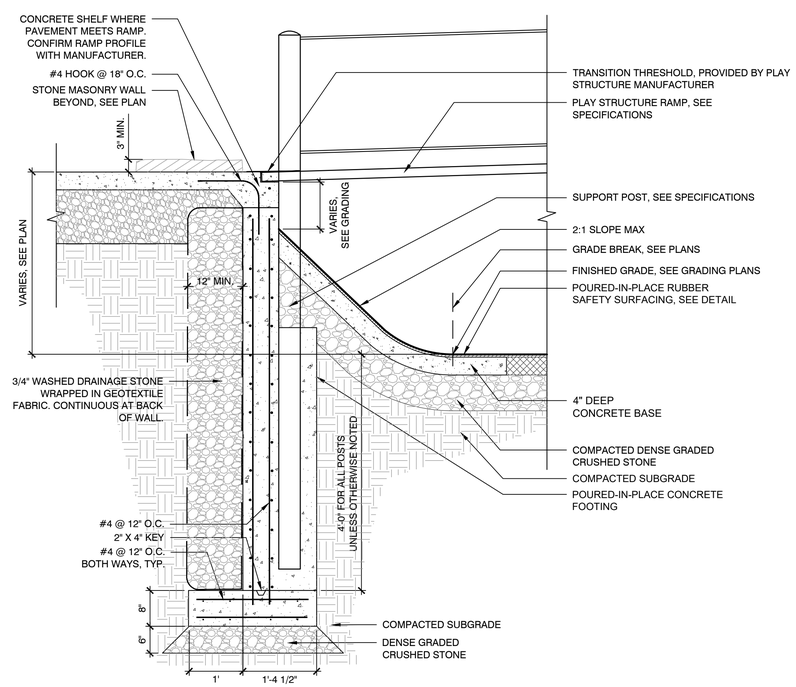

5 CONNECTION AT PLAY EQUIPMENT RAMP
SCALE: N.T.S.

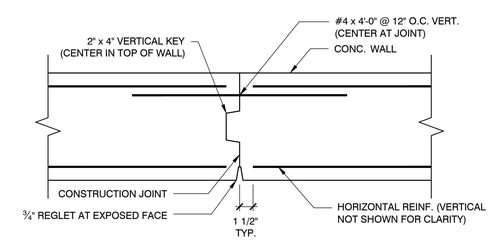

TYPICAL CONSTRUCTION JOINT (C.J.)
(SEE PLAN FOR LOCATIONS, 25' MAX.)

6 CONSTRUCTION JOINT IN CONCRETE
SCALE: N.T.S.

Project:
TOWN OF BROOKLINE, MA

CYPRESS STREET PLAYGROUND

Weston & Sampson
85 Devonshire Street,
3rd Floor, Boston, MA 02109
617.412.4480 800.SAMPSON
www.westonandsampson.com

Consultants:

Revisions:

No.	Date	Description

Seal:

Issued For:
BIDDING DOCUMENTS

Scale:	AS SHOWN
Date:	MAY 26, 2020
Drawn By:	LR, EB, HC
Reviewed By:	BMK
Approved By:	ERB
W&S Project No:	2190095
W&S File No:	

Drawing Title:
DETAILS 9- FENCE & RETAINING WALL

Sheet Number:
L8.08

COPYRIGHT 2020 WESTON & SAMPSON

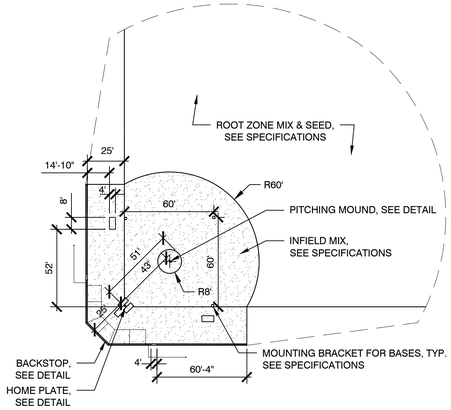

1 SOFTBALL FIELD LAYOUT

SCALE: N.T.S.

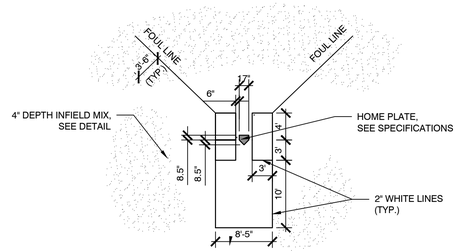

NOTES:
1. ALL DIMENSIONS ARE GIVEN TO OUTSIDE OF WHITE LINES

2 SOFTBALL HOME PLATE

SCALE: N.T.S.

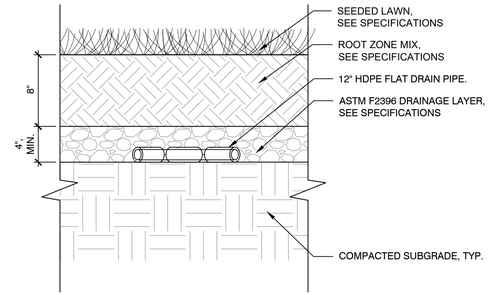

3 ROOT ZONE & SEED MIX

SCALE: N.T.S.

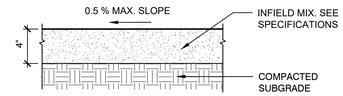

NOTE:
1. APPLY APPROVED PRE-EMERGENT WEED KILLER AT SUB-GRADE PRIOR TO INSTALLATION OF INFIELD SURFACE.

4 INFIELD MIX

SCALE: N.T.S.

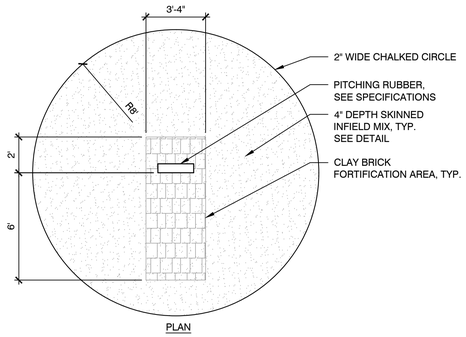

PLAN

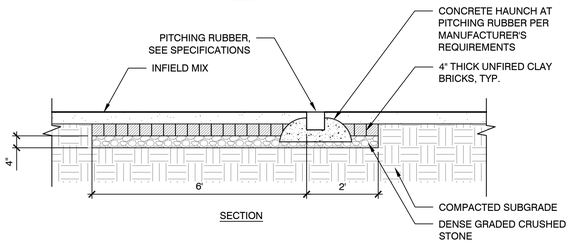

SECTION

5 SOFTBALL PITCHERS MOUND

SCALE: N.T.S.

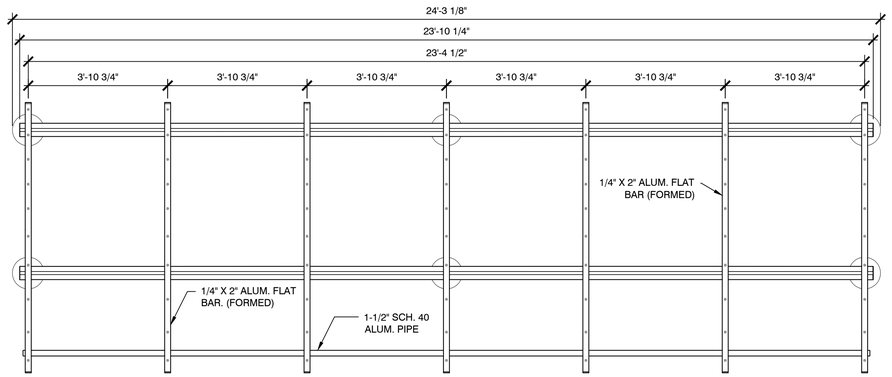

TOP VIEW
(SHOWN WITHOUT ROOF PANELS)

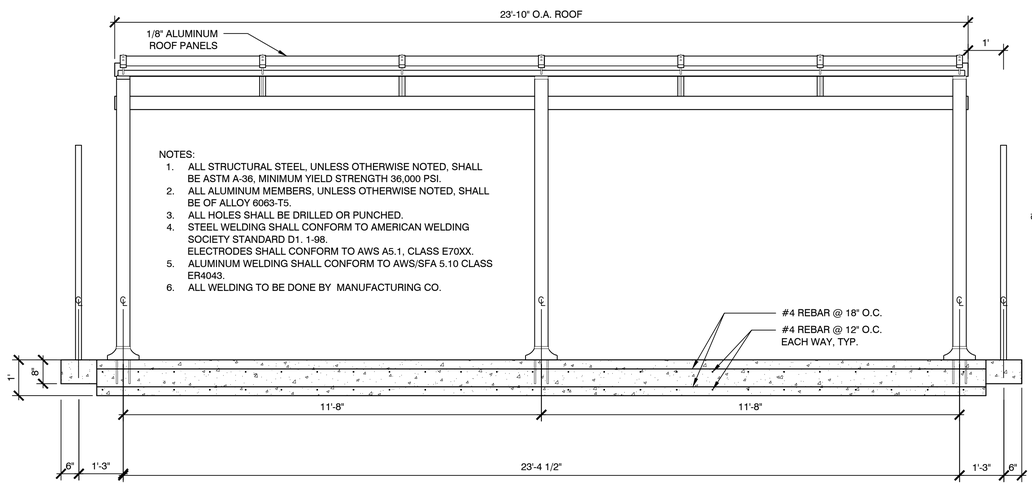

FRONT ELEVATION

NOTES:
1. ALL STRUCTURAL STEEL, UNLESS OTHERWISE NOTED, SHALL BE ASTM A-36, MINIMUM YIELD STRENGTH 36,000 PSI.
2. ALL ALUMINUM MEMBERS, UNLESS OTHERWISE NOTED, SHALL BE OF ALLOY 6063-T5.
3. ALL HOLES SHALL BE DRILLED OR PUNCHED.
4. STEEL WELDING SHALL CONFORM TO AMERICAN WELDING SOCIETY STANDARD D1. 1-98. ELECTRODES SHALL CONFORM TO AWS A5.1, CLASS E70XX.
5. ALUMINUM WELDING SHALL CONFORM TO AWS/SFA 5.10 CLASS ER4043.
6. ALL WELDING TO BE DONE BY MANUFACTURING CO.

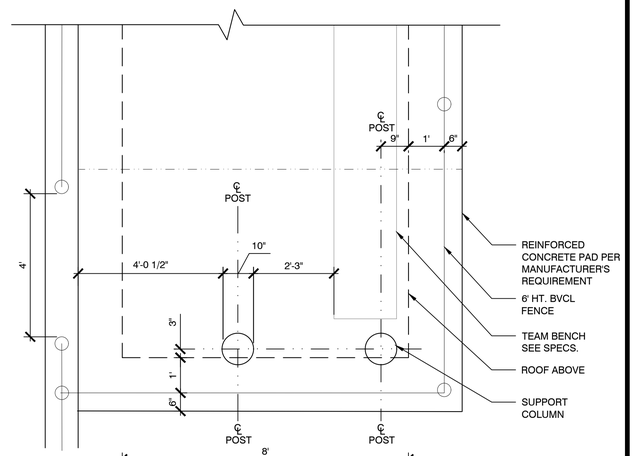

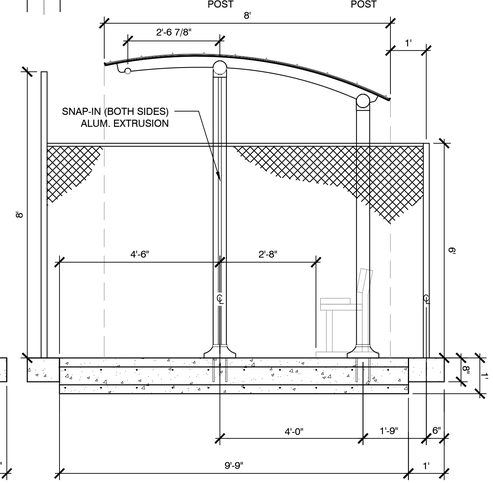

SIDE ELEVATION

7 DUGOUT STRUCTURE

SCALE: N.T.S.

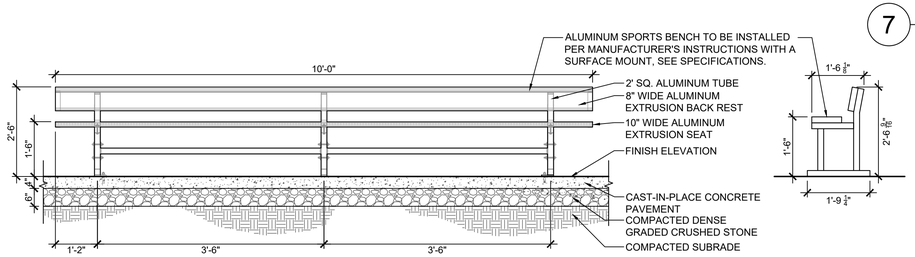

6 TEAM BENCH

SCALE: N.T.S.

Project:

TOWN OF BROOKLINE, MA

CYPRESS STREET PLAYGROUND

Weston & Sampson

85 Devonshire Street,
3rd Floor, Boston, MA 02109
617.412.4480 800.SAMPSON
www.westonandsampson.com

Consultants:

Revisions:

No.	Date	Description

Seal:

Issued For:

BIDDING DOCUMENTS

Scale:	AS SHOWN
Date:	MAY 26, 2020
Drawn By:	LR, EB, HC
Reviewed By:	BMK
Approved By:	ERB
W&S Project No:	2190095
W&S File No:	

Drawing Title:

DETAILS 10-SOFTBALL DETAILS

Sheet Number:

L8.09

COPYRIGHT 2020 WESTON & SAMPSON

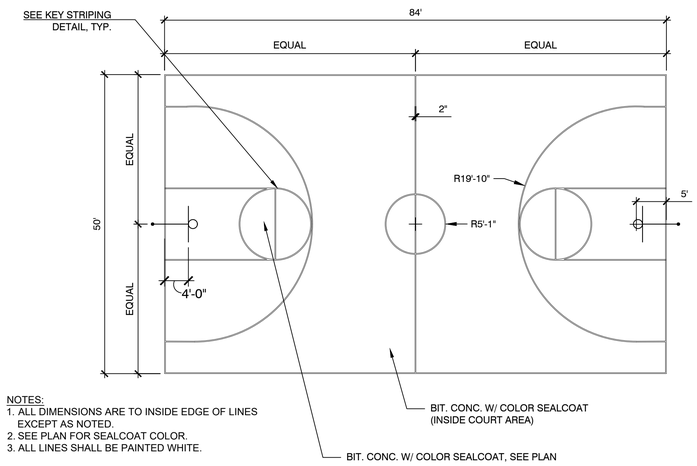

NOTES:
1. ALL DIMENSIONS ARE TO INSIDE EDGE OF LINES EXCEPT AS NOTED.
2. SEE PLAN FOR SEALCOAT COLOR.
3. ALL LINES SHALL BE PAINTED WHITE.

BASKETBALL COURT STRIPING

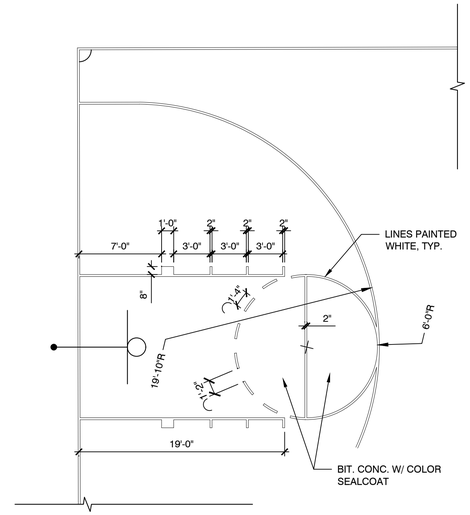

BASKETBALL KEY STRIPING

1 BASKETBALL COURT LAYOUT

SCALE: N.T.S.

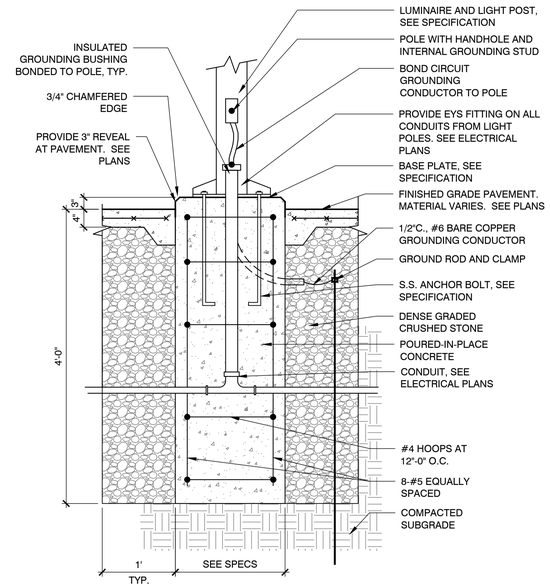

2 PEDESTRIAN LIGHT POST FOOTING - AT CONCRETE PAVEMENT

SCALE: N.T.S.

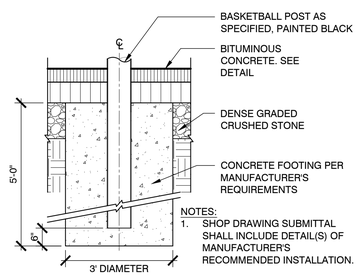

NOTES:
1. SHOP DRAWING SUBMITTAL SHALL INCLUDE DETAIL(S) OF MANUFACTURER'S RECOMMENDED INSTALLATION.

3 BASKETBALL GOAL FOOTING

SCALE: N.T.S.

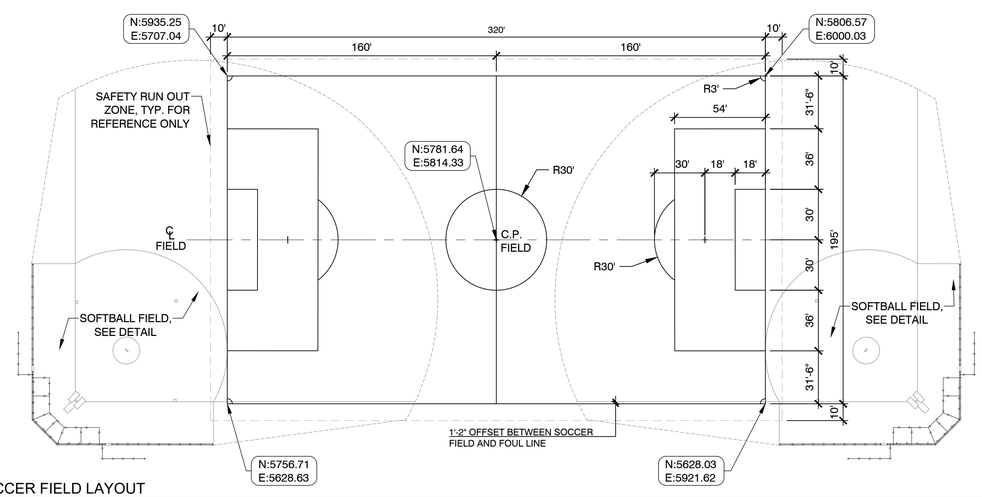

4 SOCCER FIELD LAYOUT

SCALE: N.T.S.

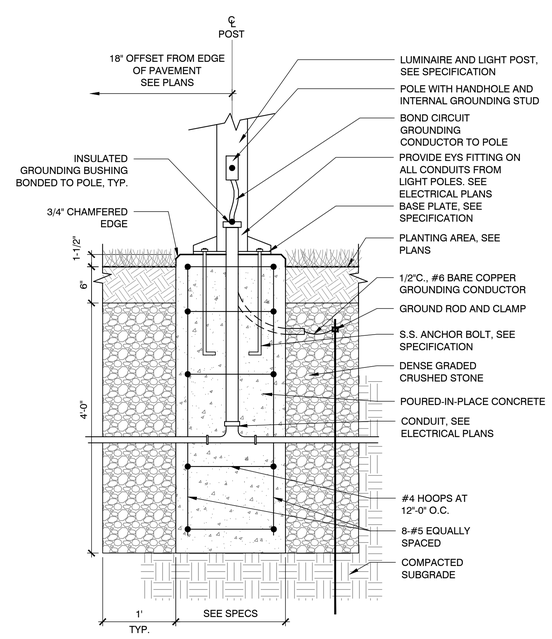

5 PEDESTRIAN LIGHT POST FOOTING -AT LANDSCAPE AREA

SCALE: N.T.S.

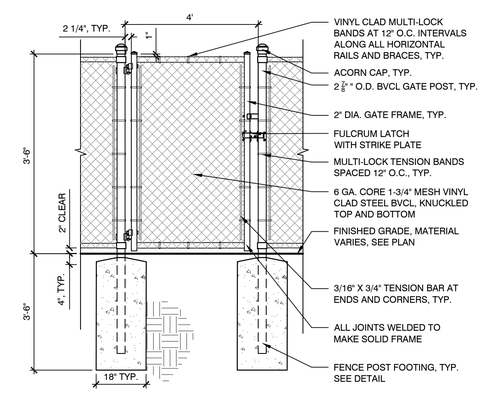

6 BV CHAIN LINK FENCE GATE

SCALE: N.T.S.

Project:

TOWN OF BROOKLINE, MA

CYPRESS STREET PLAYGROUND

Weston & Sampson

85 Devonshire Street,
3rd Floor, Boston, MA 02109
617.412.4480 800.SAMPSON
www.westonandsampson.com

Consultants:

Revisions:

No.	Date	Description

Seal:

Issued For:

BIDDING DOCUMENTS

Scale:	AS SHOWN
Date:	MAY 26, 2020
Drawn By:	LR, EB, HC
Reviewed By:	BMK
Approved By:	ERB
W&S Project No:	2190095
W&S File No:	

Drawing Title:

DETAILS 11- SPORTS LAYOUTS & LIGHT POLE DETAILS

Sheet Number:

L8.10

COPYRIGHT 2020 WESTON & SAMPSON

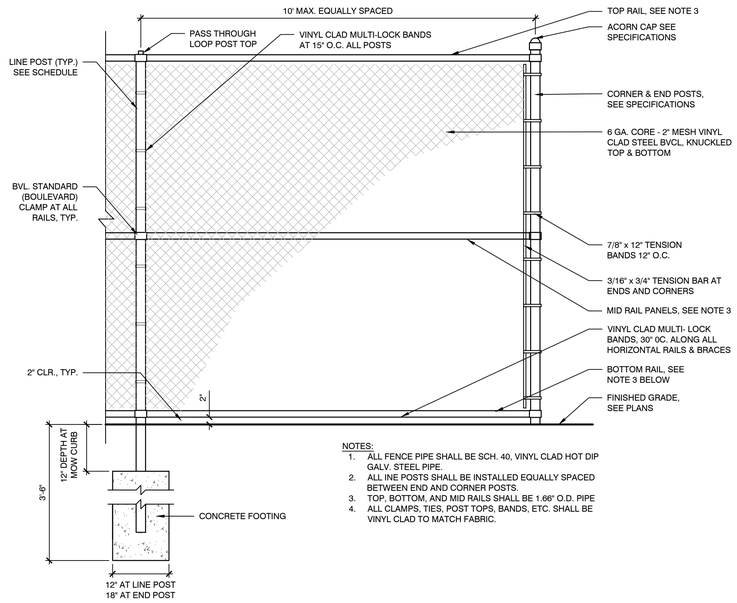

NOTES:
1. ALL FENCE PIPE SHALL BE SCH. 40, VINYL CLAD HOT DIP GALV. STEEL PIPE.
2. ALL INE POSTS SHALL BE INSTALLED EQUALLY SPACED BETWEEN END AND CORNER POSTS.
3. TOP, BOTTOM, AND MID RAILS SHALL BE 1.66" O.D. PIPE
4. ALL CLAMPS, TIES, POST TOPS, BANDS, ETC. SHALL BE VINYL CLAD TO MATCH FABRIC.

FENCE POST SCHEDULE

FENCE HEIGHT	LINE POST (O.D.)	MID RAIL (O.D.)	END AND GATE POST (O.D.)
42"	2.375"		2.875"
48"	2.375"		2.875"
72"	2.375"	1.66"	2.875"
78"	2.875"	1.66"	3.50"
96"	3.50"	1.66"	4"

NOTES:
1. ALL FENCE PIPE SHALL BE SCH. 40, VINYL CLAD HOT DIP GALV. STEEL PIPE.
2. ALL INE POSTS SHALL BE INSTALLED EQUALLY SPACED BETWEEN END AND CORNER POSTS, 10'-0" O.C. MAX.
3. REFER TO PLANS FOR LOCATION OF FENCE AND HEIGHTS

1 72", 78", AND 96" HT. BV CHAIN LINK FENCE
SCALE: N.T.S.

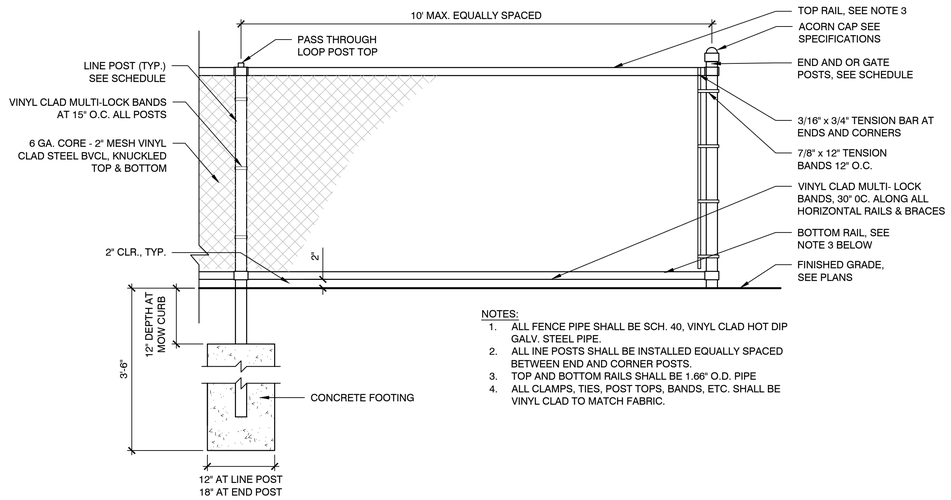

NOTES:
1. ALL FENCE PIPE SHALL BE SCH. 40, VINYL CLAD HOT DIP GALV. STEEL PIPE.
2. ALL INE POSTS SHALL BE INSTALLED EQUALLY SPACED BETWEEN END AND CORNER POSTS.
3. TOP AND BOTTOM RAILS SHALL BE 1.66" O.D. PIPE
4. ALL CLAMPS, TIES, POST TOPS, BANDS, ETC. SHALL BE VINYL CLAD TO MATCH FABRIC.

2 42" AND 48" HT. BV CHAIN LINK FENCE
SCALE: N.T.S.

NOTES:
1. BOTTOM 2 RAILS TO BE CROSS WELDED.
2. FENCE MESH FABRIC TO BE FIRST QUALITY BLACK VINYL. SEE SPECIFICATIONS
3. BAND-IT BUCKLES SHALL BE USED TO FASTEN FENCE MESH TO ALL POSTS AND RAILS.

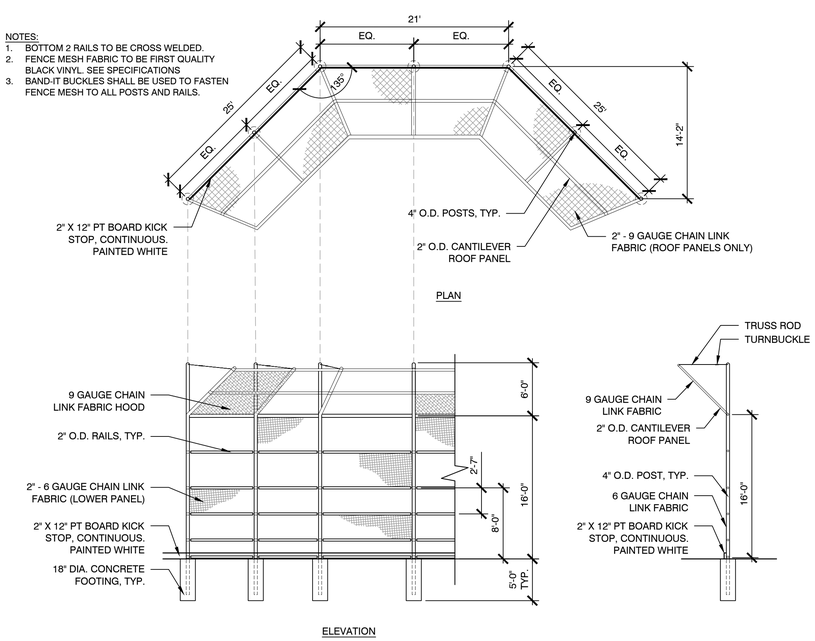

3 25' HT. BV CHAIN LINK SOFTBALL BACKSTOP
SCALE: N.T.S.

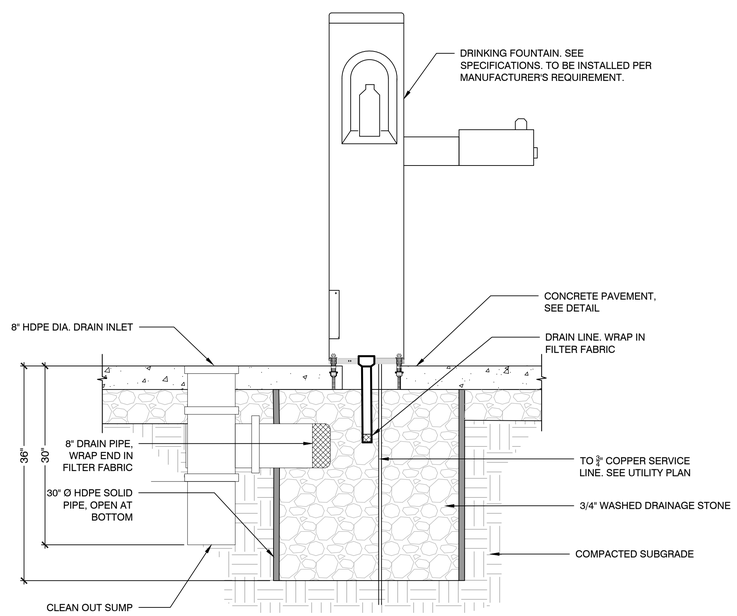

4 DRINKING FOUNTAIN
SCALE: N.T.S.

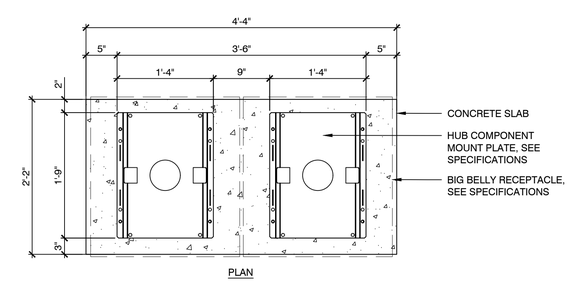

NOTES:
1. SIZE CONCRETE SLAB PER DIMENSIONS SHOWN.
2. ENSURE THERE IS PROPER SPACING AROUND THE SLAB FOR ACCESS TO THE MACHINE.
3. FOR LOCATIONS THAT RECEIVE FREQUENT SNOW FALL, IT IS RECOMMENDED TO HAVE SLAB RAISED SLIGHTLY (1-2") ABOVE SURROUNDING AREA TO ENSURE DOOR CLEARANCE THROUGH WINTER CONDITIONS.
4. FOR SLAB THICKNESS AND CONCRETE TYPE, CONSULT YOUR LOCAL CONCRETE COMPANY. THE APPROPRIATE SPECIFICATION WILL CHANGE BASED ON YOUR GEOGRAPHIC LOCATION.
5. THE MOUNTING BRACKET SUPPLIED WITH EACH MACHINE NEEDS TO BE ATTACHED TO THE SLAB AT THE LOCATIONS SHOWN.
6. FIVE 3/8" CONCRETE ANCHORS ARE PROVIDED WITH EACH MACHINE OR STUDS CAN BE INSERTED DIRECTLY INTO THE CONCRETE WHEN THE SLAB IS FORMED.
7. STUDS SHOULD PROTRUDE FROM THE SLAB BETWEEN 0.5" AND 0.75".

5 CONCRETE SLAB AT TRASH AND RECYCLE RECEPTACLES (BIG BELLY)
SCALE: N.T.S.

Project:
TOWN OF BROOKLINE, MA

CYPRESS STREET PLAYGROUND

Weston & Sampson
85 Devonshire Street,
3rd Floor, Boston, MA 02109
617.412.4480 800.SAMPSON
www.westonandsampson.com

Consultants:

Revisions:

No.	Date	Description

Seal:

Issued For:
BIDDING DOCUMENTS

Scale:	AS SHOWN
Date:	MAY 26, 2020
Drawn By:	LR, EB, HC
Reviewed By:	BMK
Approved By:	ERB
W&S Project No:	2190095
W&S File No:	

Drawing Title:
DETAILS 12- CHAIN LINK FENCE, BACKSTOP & SITE AMENITIES

Sheet Number:
L8.11

COPYRIGHT 2020 WESTON & SAMPSON

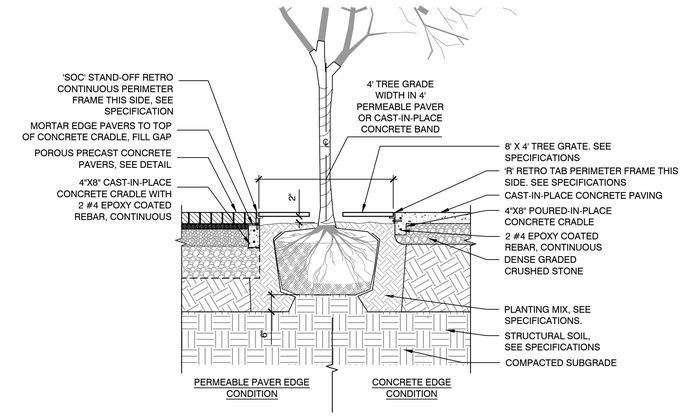

1 TREE GRATE

SCALE: N.T.S.

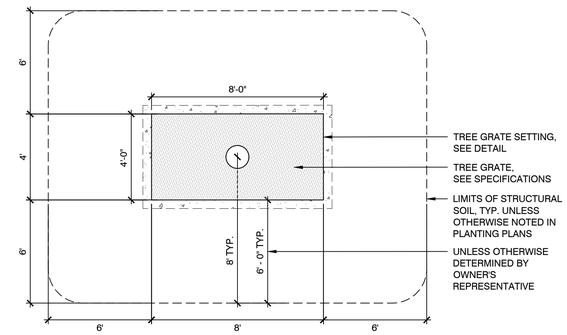

2 STRUCTURAL SOIL

SCALE: N.T.S.

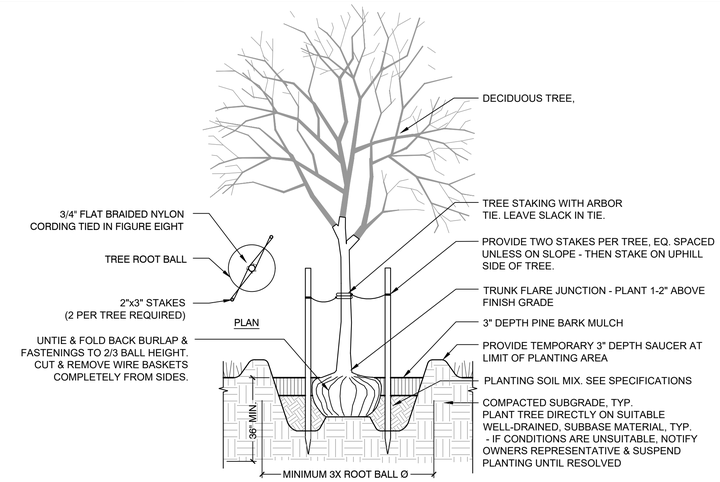

3 TREE PLANTING AND STAKING

SCALE: N.T.S.

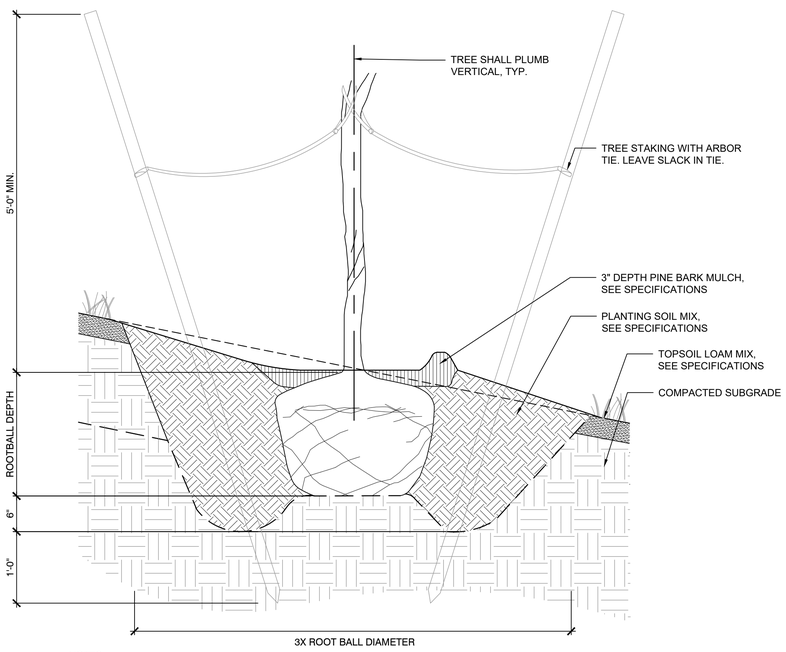

NOTES:
1. SCOPE VARIES. SEE GRADING PLANS. 3:1 MAX. SLOPE PLANTING. CONTRACTOR SHALL NOTIFY OWNER'S REPRESENTATIVE IF SLOPES ARE GREATER THAN 3:1.
2. OWNER'S REPRESENTATIVE AND CONTRACTOR SHALL MARK NORTH SIDE OF TREE AT NURSERY AND LOCATE TREE AT SAME ORIENTATION WHEN INSTALLING.
3. REMOVE 2/3 OF BURLAP WRAP AND WIRE BASKET OR TO THE GREATEST EXTENT POSSIBLE WITHOUT COMPROMISING THE STRUCTURAL INTEGRITY OF ROOTBALL.

4 TREE PLANTING ON SLOPE

SCALE: N.T.S.

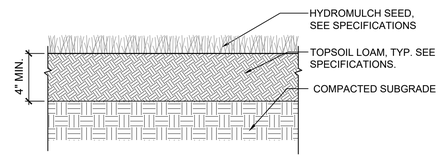

5 LOAM AND SEED

SCALE: N.T.S.

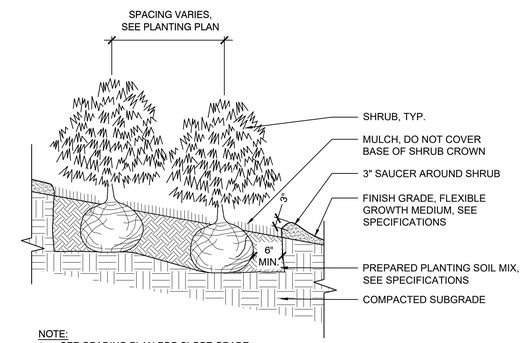

NOTE:
1. SEE GRADING PLAN FOR SLOPE GRADE.

6 SHRUB PLANTING ON SLOPE

SCALE: N.T.S.

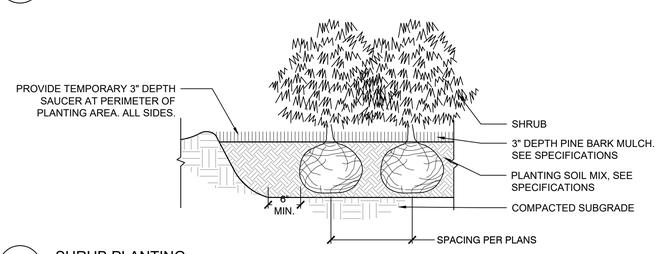

7 SHRUB PLANTING

SCALE: N.T.S.

GROUNDCOVER SPACING TABLE

PLANT SPACING "A"	PLANT SPACING "B"	PLANTS	AREA UNIT
6" O.C.	5.2"	4.61	1 SQ. FT.
8" O.C.	6.93"	2.6	1 SQ. FT.
10" O.C.	8.66"	1.66	1 SQ. FT.
12" O.C.	10.4"	1.15	1 SQ. FT.

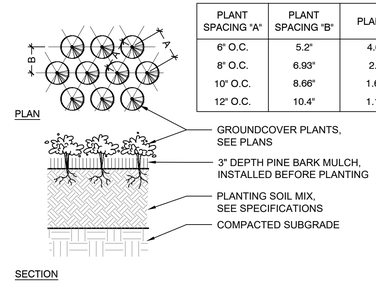

NOTES:
1. ALL GROUNDCOVERS TO BE PLANTED IN TRIANGULAR PATTERN. SEE PLANTING SCHEDULE FOR SPACING.
2. EROSION CONTROL MAT TO BE USED ON ALL SLOPES 3:1 OR GREATER. SEE SPECIFICATIONS

8 GROUND COVER PLANTING

SCALE: N.T.S.

Project:

TOWN OF BROOKLINE, MA

CYPRESS STREET PLAYGROUND

Weston & Sampson

85 Devonshire Street,
3rd Floor, Boston, MA 02109
617.412.4480 800.SAMPSON
www.westonandsampson.com

Consultants:

Revisions:

No.	Date	Description

Seal:

Issued For:

BIDDING DOCUMENTS

Scale:	AS SHOWN
Date:	MAY 26, 2020
Drawn By:	LR, EB, HC
Reviewed By:	BMK
Approved By:	ERB
W&S Project No:	2190095
W&S File No:	

Drawing Title:

DETAILS 13- PLANTING DETAILS

Sheet Number:

L8.12

COPYRIGHT 2020 WESTON & SAMPSON

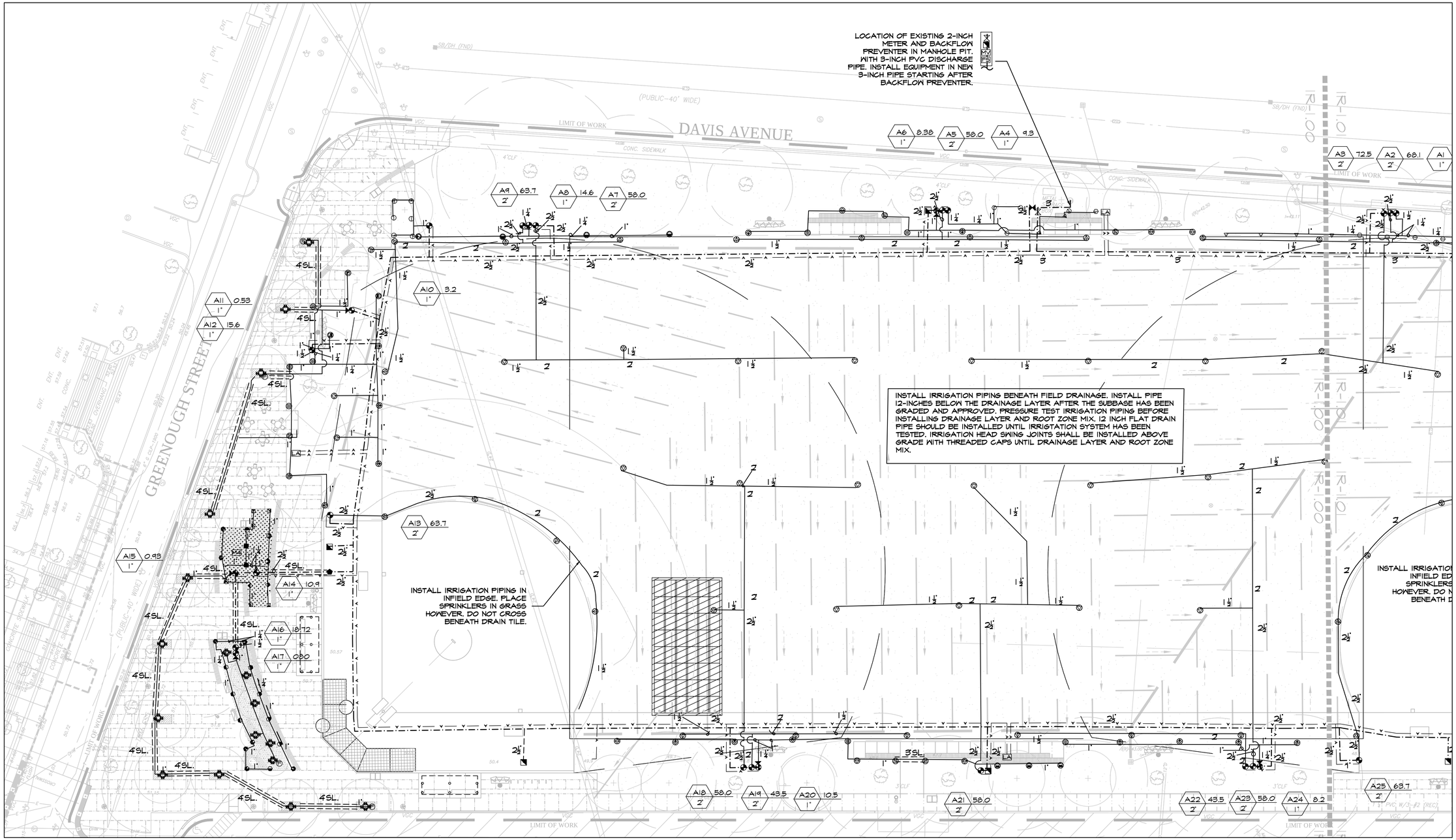

IRRIGATION NOTES

0. SEE IRRIGATION DETAILS AND SPECIFICATIONS FOR ADDITIONAL REQUIRED INFORMATION.
1. COORDINATE FINAL LOCATION OF SPRINKLERS AND NOZZLE SELECTION W/ FINAL APPROVED LANDSCAPE.
2. PIPE AND VALVE LOCATIONS ARE DIAGRAMMATIC, CONTRACTOR SHALL FIELD VERIFY.
3. VALVES AND VALVE BOXES SHALL BE PLACED, WHERE POSSIBLE, IN PLANTED AREAS UNDER MULCH A MINIMUM OF TEN (10) FEET FROM ALL PLAY SURFACES.
4. INSTALL PIPING AS FAR FROM TREES AND ROOT BALLS AS POSSIBLE WHILE MAINTAINING SPRINKLER AND DRIP TUBE SPACING.
5. CONTROL WIRE SHALL BE #14 GAUGE DTS FROM DECODERS TO VALVES. DECODERS SHALL BE NO MORE THAN 15 FEET FROM ELECTRIC VALVE THAT IT CONTROLS. TWO-WIRE COMMUNICATION CABLE/CONTROL FROM CONTROLLER TO VALVES SHALL BE PVC/POLYETHYLENE DOUBLE JACKETED, TWO CONDUCTOR 14 AWG SOLID CORE, TIN COATED COLOR CODED, RED AND BLACK, DESIGNED FOR DIRECT BURIAL. SUFFICIENT SLACK SHOULD BE LEFT IN COMMUNICATION CABLE/CONTROL AT DECODER LOCATIONS TO BRING DECODERS AND SPLICES ABOVE GRADE.
6. QUICK COUPLING VALVES SHALL BE INSTALLED ON 1 INCH PVC SWING JOINTS WITH BRASS INSERTS AND STABILIZERS. MINIMUM LENGTH 18-INCHES. (SEE DETAIL) AND ADMINISTRATION.

IRRIGATION NOTES

7. SPRAY AND ROTARY SPRINKLERS IN THE MULTIPURPOSE FIELD AREA SHALL BE INSTALLED ON SWIVEL JOINT PIPE ASSEMBLIES, MIN. LENGTH TO BE 12 INCHES. LARGE ROTARY SPRINKLERS IN THE MULTIPURPOSE FIELD AREA, INCLUDING AREAS CONSIDERED FOUL TERRITORY, SHALL BE INSTALLED ON 1-INCH PVC PREFABRICATED UNITIZED SWING JOINT ASSEMBLIES WITH INTEGRAL O-RINGS. SMALL TO MEDIUM ROTARY SPRINKLERS AND SPRAY HEADS OUTSIDE THE MULTIPURPOSE FIELD AREA SHALL BE INSTALLED ON SWING PIPE ASSEMBLIES, MINIMUM LENGTH 12-INCHES AND MAXIMUM LENGTH 18 INCHES.
8. IRRIGATION SYSTEM IS DESIGNED FOR SEPARATE WATER SUPPLY TO PROVIDE 73 GPM MAX FROM EXISTING 2 INCH SERVICE. SYSTEM TO PRODUCE 83-PSI DYNAMIC PRESSURE AT CONTRACTOR'S POINT OF CONNECTION IN LANDSCAPED AREA TO 3-INCH PVC PIPE DOWNSTREAM OF METER AND BACKFLOW PREVENTER..
9. CONTRACTOR SHALL TEST DYNAMIC PRESSURE BEFORE STARTING WORK, REPORT ANY DEVIATION FROM PRESSURE REQUIRED TO OWNER'S REP. BEFORE CONTINUING.
10. INSTALL CONTROLLER IN ENCLOSURE, GENERALLY WHERE SHOWN ON THE DRAWINGS, HARD WIRE TO EXISTING120 VOLT, DEDICATED 20 AMP CIRCUIT, POWER SUPPLY. REMOVE EXISTING CONTROLLER AND TURN OVER CONTROLLER TO OWNER'S REPRESENTATIVE. ROUTE COMMUNICATION AND CONTROL WIRE TO CONTROLLER VIA 1-1/2-INCH CONDUIT THROUGH ENCLOSURE BASE.

CONTINUED SHEET IR-1.01

LATERAL PIPE SCHEDULE FOR UNMARKED PIPE	
FLOW	PIPE SIZE / TYPE
0-7 GPM	1 INCH 100 PSI POLYETHYLENE
8-15 GPM	1-1/4 INCH 100 PSI POLYETHYLENE
16-29.99 GPM	1-1/2 INCH CLASS-200 PVC
30-49.99 GPM	2 INCH CLASS-200 PVC
50-72.5 GPM	2-1/2 INCH CLASS-200 PVC

PVC PIPE ONLY IN MULTIPURPOSE FIELD AREA.

Irrigation Consulting, Inc.
Providing innovative design solutions for irrigation worldwide.
20 Merrit Parkway
Nashua, NH 03062
(978) 453.2472
BVINCHESI@IRRIGATIONCONSULTING.COM
112 S. Old Statesville Rd, Suite 104
Huntersville, NC 28078
(704) 845.3686

SCALE:
1" = 20'-0"
0 10 20 40FT

Project:
TOWN OF BROOKLINE, MA
CYPRESS STREET PLAYGROUND

Weston & Sampson
85 Devonshire Street,
3rd Floor, Boston, MA 02109
617.412.4480 800.SAMPSON
www.westonandsampson.com

Consultants:

Revisions:

No.	Date	Description

Seal:

Issued For:
CONSTRUCTION DOCUMENTS

Scale:	AS SHOWN
Date:	MAY 26, 2020
Drawn By:	SOG
Reviewed By:	BEV
Approved By:	BEV
W&S Project No:	2190095
W&S File No:	

Drawing Title:
IRRIGATION PLAN

Sheet Number:
IR1.00

COPYRIGHT 2017 WESTON & SAMPSON

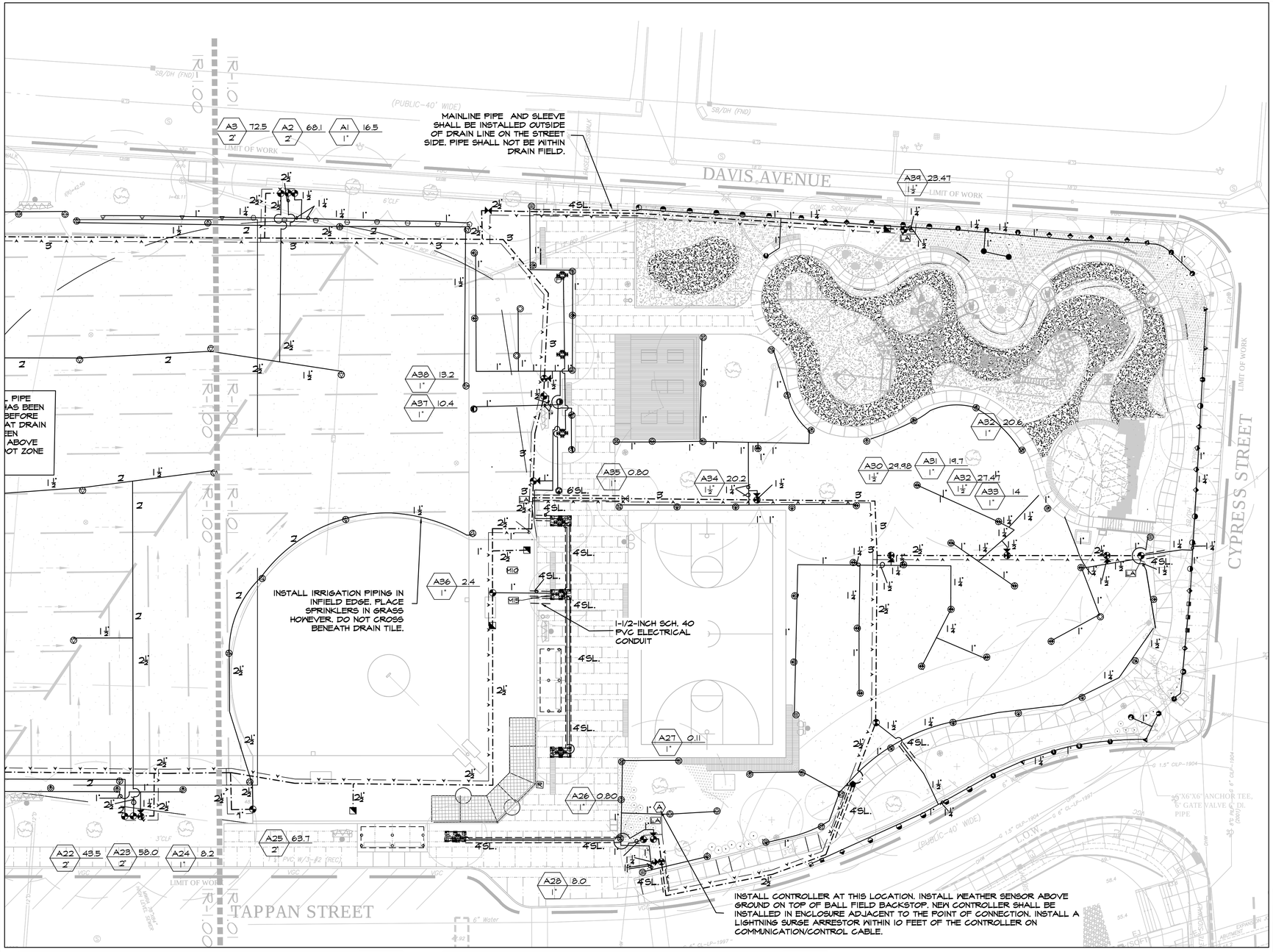

IRRIGATION LEGEND

SYMBOL	PSI	SPACING	DESCRIPTION
Q H F	50	50'	LARGE ROTARY SPRINKLER WITH CHECK VALVE (STANDARD NOZZLES)
	50	35'	SMALL ROTARY SPRINKLER WITH CHECK VALVE (STANDARD NOZZLES)
	50	18'	
Q H F	40	25'	MP3000 ROTARY NOZZLE ON 6-INCH SPRAY SPRINKLER
	40	18'	MP2000 ROTARY NOZZLE ON 6-INCH SPRAY SPRINKLER
	40	15'	MP1000 ROTARY NOZZLE ON 6-INCH SPRAY SPRINKLER
	40	5' X 30' 5' X 15'	MPSS, MPLCS OR MPRCS ROTARY NOZZLE ON 6-INCH SPRAY SPRINKLER
Q H TG V F	30	15'	6-INCH POP UP SPRAY SPRINKLER W/ CHECK VALVE AND PRESS. REG.
	30	12'	
	30	10'	
Q H TG V F	30	15'	12-INCH POP UP SPRAY SPRINKLER W/ CHECK VALVE AND PRESS. REG.
	30	12'	
	30	10'	
	30	8'	
	30	5'	
	30	-	PRESSURE COMPENSATING 2 GPH EMITTER WITHIN DRIP DEEP WATERING TREE STAKE (4 PER TREE)
			BLANK DRIP TUBING TREE RING

- 24 VOLT ELECTRIC ZONE VALVE (SEE VALVE DESIGNATOR FOR FLOW AND SIZES)
- ISOLATION GATE VALVE (3 INCH)
- ISOLATION GATE VALVE (2-1/2 INCH AND SMALLER)
- 1" QUICK COUPLING VALVE
- 24 VOLT ELECTRIC ZONE VALVE W/ DISK FILTER (MPROTATOR ZONES)
- MANUAL FLUSHING VALVE
- 24 VOLT ELECTRIC ZONE VALVE W/ DISK FILTER AND PRESSURE REGULATOR- DRIP (SEE VALVE DESIGNATOR FOR FLOW AND SIZES)
- CLASS-200 PVC LATERAL PIPING (SIZE AS INDICATED, ALL UNLABELED PIPE TO BE 1 INCH)
- CLASS-200 PVC MAINLINE PIPING
- CLASS-160 PVC PIPE SLEEVE (SIZE AS INDICATED) INSTALL SCH-40 PVC WIRE CONDUIT ADJACENT TO ALL MAINLINE PIPE SLEEVES, MINIMUM WIRE CONDUIT SIZE TO BE 2-INCH, UNLESS OTHERWISE NOTED. SEE SLEEVING DETAIL.
- A — COMMUNICATION/CONTROL 2 WIRE PATH
- R AUTOMATIC WIRELESS RAIN SENSOR
- A AUTOMATIC CONTROLLER
- MV 2-INCH BRASS NORMALLY OPEN MASTER VALVE
- FS 2-INCH FLOW SENSOR
- LA LIGHTNING ARRESTOR W/GROUND
- 1-INCH AIR RELEASE VALVE

VALVE DESIGNATION:

A 25 1" — STATION NO. / FLOW / VALVE SIZE

LATERAL PIPE SCHEDULE FOR UNMARKED PIPE	
FLOW	PIPE SIZE / TYPE
0-7 GPM	1 INCH 100 PSI POLYETHYLENE
8-15 GPM	1-1/4 INCH 100 PSI POLYETHYLENE
16-29.99 GPM	1-1/2 INCH CLASS-200 PVC
30-49.99 GPM	2 INCH CLASS-200 PVC
50-72.5 GPM	2-1/2 INCH CLASS-200 PVC

PVC PIPE ONLY IN MULTIPURPOSE FIELD AREA.

IRRIGATION NOTES

11. INSTALL RAIN SENSOR ON SOFTBALL FIELD BACKSTOP. SENSOR SHALL BE WIRELESS. SECURE TO BACKSTOP LEVEL WITH THE TOP OF THE BACKSTOP.
12. ALL ABOVE GROUND WIRING SHALL BE INSTALLED IN RIGID, PVC CONDUIT.
13. COORDINATE LOCATION OF EXISTING AND FUTURE UTILITIES ON SITE AND CONTACT PROPER AUTHORITIES AND UTILITY COMPANIES BEFORE THE START OF WORK.
14. BLANK DRIP TUBING SHALL ENCIRCLE THE ROOT BALL OF THE TREE FOR DEEP DRIP TREE STAKES' CONNECTIONS. INSTALL MINIMUM THREE (3) TREE LANDSCAPE STAPLES PER TREE.
15. FLUSH LATERAL LINES BEFORE INSTALLING BLANK DRIP TUBING AND EMITTERS IN WATERING TREE STAKES OR SPRINKLERS.
17. BLANK DRIP TUBING TO BE INSTALLED 4" BELOW GRADE.
18. INSTALL MANUAL FLUSH PORTS AT GENERALLY WHERE SHOWN ON THE DRAWINGS.
19. SPRAY SPRINKLERS FOR TURF SHALL HAVE 6 INCH POP UP HEIGHT, AND GROUND COVER AND SHRUB SPRINKLERS SHALL HAVE 12 INCH POP UP HEIGHT.
20. CONTRACTOR MUST SUBMIT SPECIFICATION SHEETS CLEARLY MARKED UP TO SPECIFIC PRODUCT AS PER THE WRITTEN SPECIFICATIONS TO THE OWNER'S REPRESENTATIVE FOR APPROVAL PRIOR TO ORDERING MATERIAL AND BEGINNING WORK.

IRRIGATION NOTES

21. MATERIAL SUBSTITUTIONS WHICH VARY FROM THE SPECIFIED PRODUCTS MUST BE SUBMITTED TO THE OWNER'S REPRESENTATIVE FOR APPROVAL AS PART OF THE SUBMITTAL PROCESS.
22. ONCE APPROVED, SUBMITTALS HAVE BEEN RETURNED TO THE CONTRACTOR, WORK MAY BEGIN. THE OWNER'S REPRESENTATIVE MUST BE NOTIFIED A MINIMUM OF 7-DAYS IN ADVANCE OF THE START OF WORK TO COORDINATE ON-SITE SUPERVISION AND ADMINISTRATION.

Irrigation Consulting, Inc.
Providing innovative design solutions for irrigation worldwide.
20 Merrit Parkway
Nashua, NH 03062
(978) 433-8112
BVINCENS@IRRIGATIONCONSULTING.COM
112 S. Old Statesville Rd., Suite 104
Huntersville, NC 28078
(704) 843-3686

SCALE: 1" = 20'-0" 0 10 20 40FT

Project:
TOWN OF BROOKLINE, MA
CYPRESS STREET PLAYGROUND

Weston & Sampson
85 Devonshire Street,
3rd Floor, Boston, MA 02109
617.412.4480 800.SAMPSON
www.westonandsampson.com

Consultants:

Revisions:

No.	Date	Description

Seal:

Issued For:
CONSTRUCTION DOCUMENTS

Scale:	AS SHOWN
Date:	MAY 26, 2020
Drawn By:	SOG
Reviewed By:	BEV
Approved By:	BEV
W&S Project No:	2190095
W&S File No:	

Drawing Title:
IRRIGATION PLAN

Sheet Number:
IR1.01

COPYRIGHT 2017 WESTON & SAMPSON

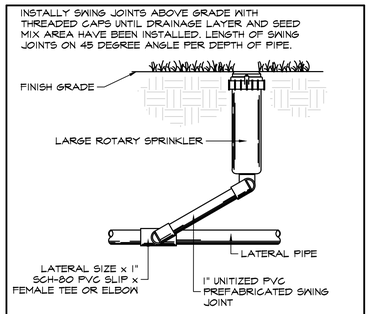

1 LARGE ROTARY SPRINKLER DETAIL
NO SCALE

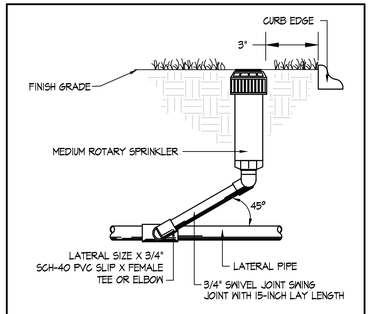

2 MEDIUM ROTARY SPRINKLER DETAIL
NO SCALE

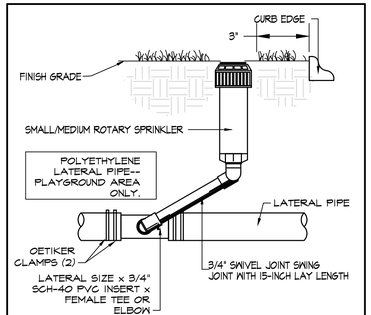

3 (WITH POLYETHYLENE LATERAL LINE) NO SCALE

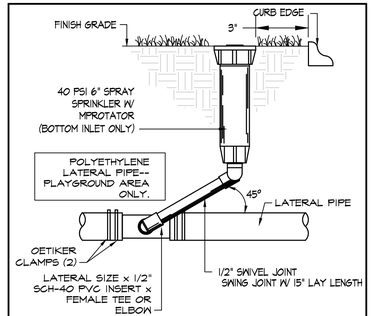

4 SPRAY SPRINKLER W/ MPROTATOR DETAIL
(WITH POLYETHYLENE LATERAL LINE) NO SCALE

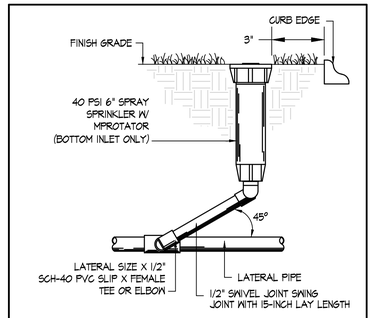

5 SPRAY SPRINKLER W/ MPROTATOR DETAIL
NO SCALE

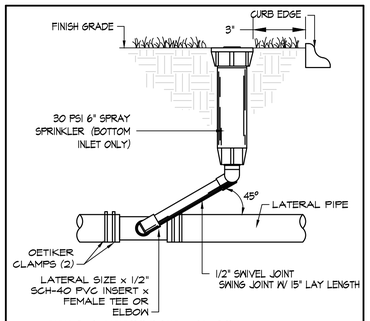

6 SPRAY SPRINKLER DETAIL
(WITH POLYETHYLENE LATERAL LINE) NO SCALE

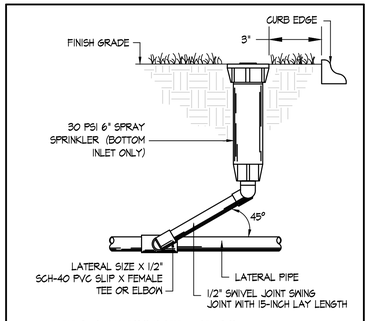

7 SPRAY SPRINKLER DETAIL
NO SCALE

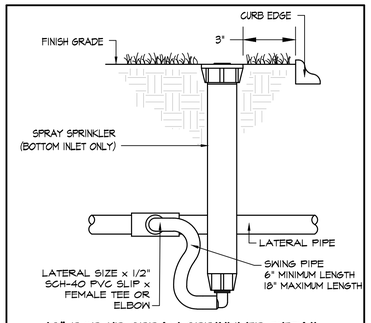

8 12" POP-UP SPRAY SPRINKLER DETAIL
(WITH PVC LATERAL LINE) NO SCALE

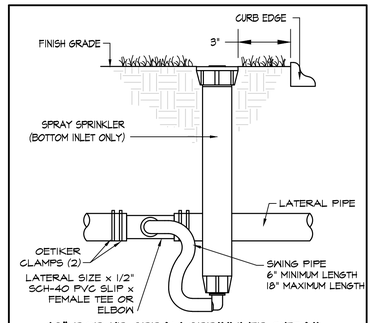

9 12" POP-UP SPRAY SPRINKLER DETAIL
(WITH POLYETHYLENE LATERAL LINE) NO SCALE

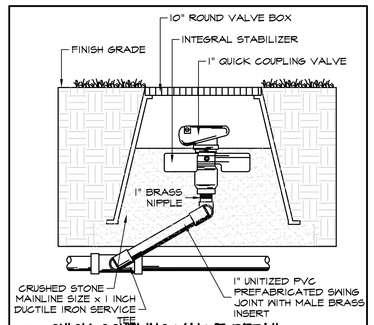

10 QUICK COUPLING VALVE DETAIL
NO SCALE

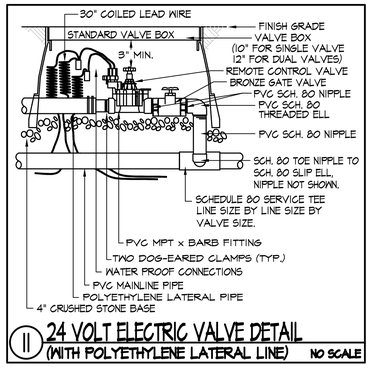

11 24 VOLT ELECTRIC VALVE DETAIL
(WITH POLYETHYLENE LATERAL LINE) NO SCALE

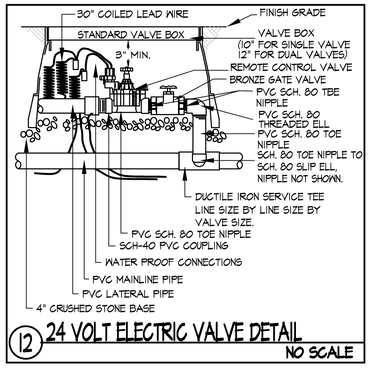

12 24 VOLT ELECTRIC VALVE DETAIL
NO SCALE

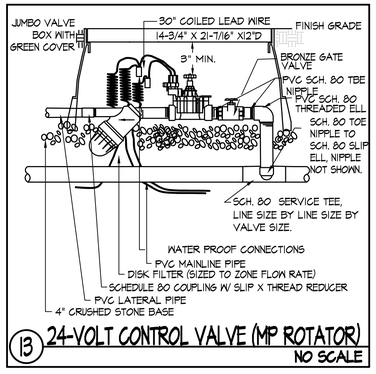

13 24-VOLT CONTROL VALVE (MP ROTATOR)
NO SCALE

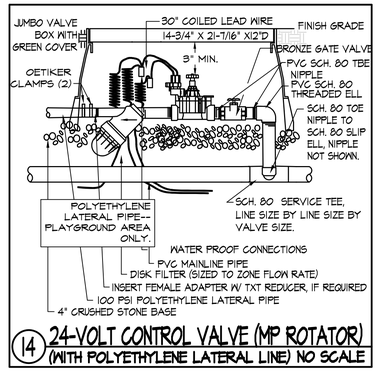

14 24-VOLT CONTROL VALVE (MP ROTATOR)
(WITH POLYETHYLENE LATERAL LINE) NO SCALE

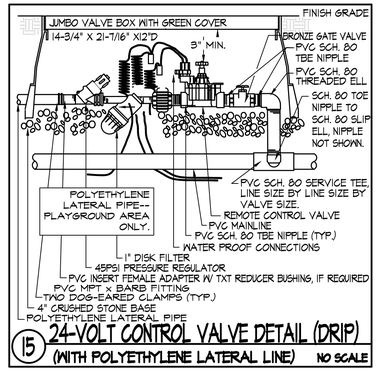

15 24-VOLT CONTROL VALVE DETAIL (DRIP)
(WITH POLYETHYLENE LATERAL LINE) NO SCALE

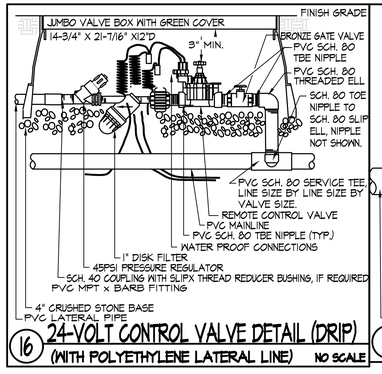

16 24-VOLT CONTROL VALVE DETAIL (DRIP)
(WITH POLYETHYLENE LATERAL LINE) NO SCALE

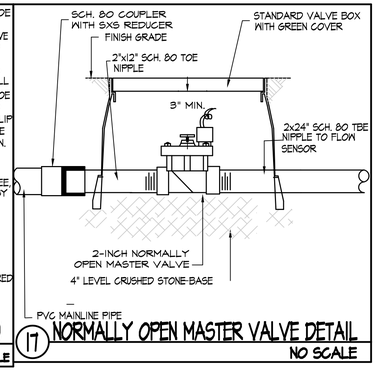

17 NORMALLY OPEN MASTER VALVE DETAIL
NO SCALE

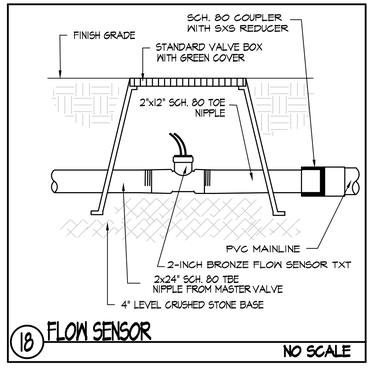

18 FLOW SENSOR
NO SCALE

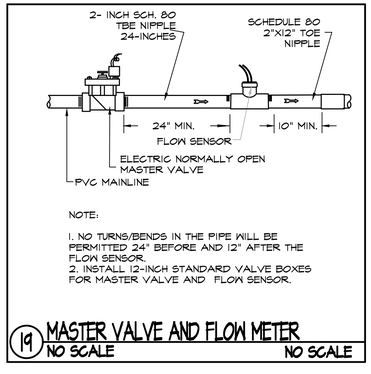

NOTE:

1. NO TURNS/BENDS IN THE PIPE WILL BE PERMITTED 24" BEFORE AND 12" AFTER THE FLOW SENSOR.
2. INSTALL 12-INCH STANDARD VALVE BOXES FOR MASTER VALVE AND FLOW SENSOR.

19 MASTER VALVE AND FLOW METER
NO SCALE NO SCALE

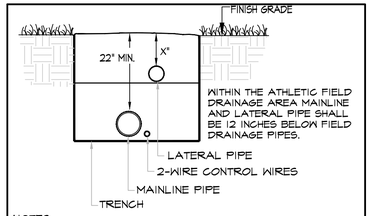

NOTES:

1. TIE LOOSE LOOP OF WIRE AT CHANGES OF DIRECTION
2. X=12" POLYETHYLENE PIPE
   16" PVC PIPE
3.

20 TRENCH AND WIRE DETAIL
NO SCALE

SCALE: NO SCALE

Irrigation Consulting, Inc.
Providing innovative design solutions for irrigation worldwide.
20 Merrit Parkway
Nashua, NH 03062
(978) 425-8412
BVINCHES@IRRIGATIONCONSULTING.COM
112 S. Old Statesville Rd., Suite 104
Huntersville, NC 28078
(704) 843-3688

Project:
TOWN OF BROOKLINE, MA
CYPRESS STREET PLAYGROUND

Weston & Sampson
85 Devonshire Street,
3rd Floor, Boston, MA 02109
617.412.4480 800.SAMPSON
www.westonandsampson.com

Consultants:

Revisions:

No.	Date	Description

Seal:

Issued For:
CONSTRUCTION DOCUMENTS

Scale:	AS SHOWN
Date:	MAY 26, 2020
Drawn By:	SOG
Reviewed By:	BEV
Approved By:	BEV
W&S Project No:	2190095
W&S File No:	

Drawing Title:
IRRIGATION DETAILS

Sheet Number:
IR1.02

COPYRIGHT 2017 WESTON & SAMPSON

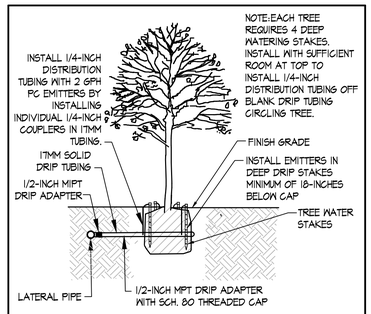

21 24-INCH TREE WATERING STAKE
NO SCALE

NOTE: TREE WATERING STAKES SHALL BE DRIVEN INTO THE ROOT BALL WITH ONLY THE CAP ABOVE GRADE. 1/4" DISTRIBUTION TUBING SHALL BE CONNECTED TO THE 17 MM SOLID TUBING. 1/4 INCH TUBING SHALL BE INSTALLED BELOW GRADE AND INSERTED INTO THE TREE STAKE INLET. TREES SHALL RECEIVE 2 GPH PC-MODULE EMITTERS. TREE STAKES TO BE INSTALLED 18-INCHES FROM TREE TRUNK.

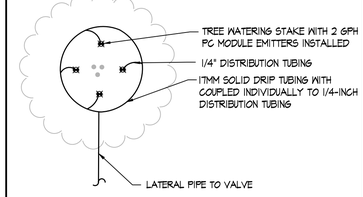

22 TREE PIT WATERING STAKE- PLAN VIEW
NO SCALE

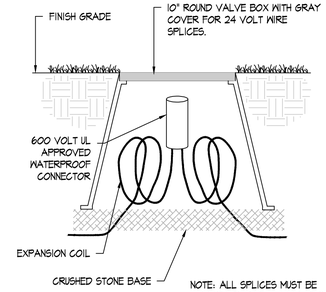

NOTE: ALL SPLICES MUST BE APPROVED BY THE IRRIGATION CONSULTANT.

23 WIRE SPLICE DETAIL
NO SCALE

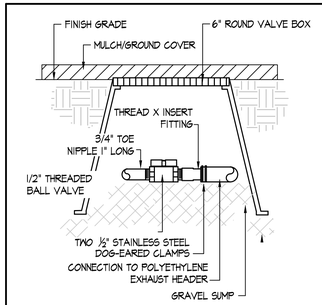

24 MANUAL FLUSHING VALVE DETAIL
NO SCALE

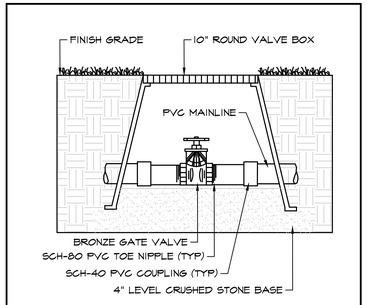

25 ISOLATION GATE VALVE DETAIL
NO SCALE

GROUNDING SHALL NOT EXCEED 10 OHMS FROM ANY ELECTRICAL DEVICE OR WIRE TO EARTH GROUND GROUND SHALL BE A MINIMUM OF 10 FEET FROM LIGHTNING ARRESTOR/DECODER. WATERPROOF ALL UNUSED WIRES.

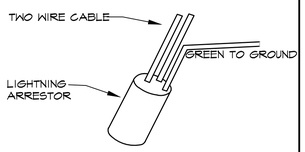

PROVIDE LIGHTNING ARRESTORS IN QUANTITIES AND SPACING AS SHOWN ON THE IRRIGATION PLAN.

27 LIGHTNING ARRESTOR DETAIL
NO SCALE

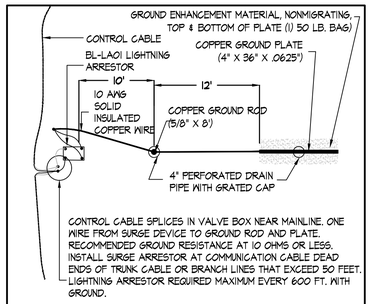

CONTROL CABLE SPLICES IN VALVE BOX NEAR MAINLINE. ONE WIRE FROM SURGE DEVICE TO GROUND ROD AND PLATE. RECOMMENDED GROUND RESISTANCE AT 10 OHMS OR LESS. INSTALL SURGE ARRESTOR AT COMMUNICATION CABLE DEAD ENDS OF TRUNK CABLE OR BRANCH LINES THAT EXCEED 50 FEET. LIGHTNING ARRESTOR REQUIRED MAXIMUM EVERY 600 FT. WITH GROUND.

28 LIGHTNING ARRESTOR GROUND DETAIL
NO SCALE

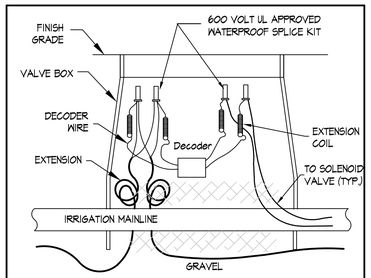

29 DECODER IN VALVE BOX DETAIL
NO SCALE

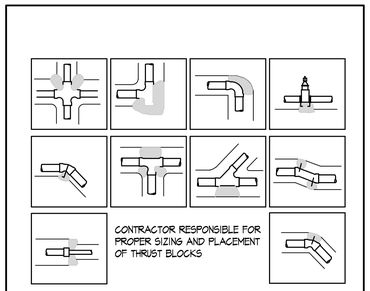

30 THRUST BLOCKING DETAIL
NO SCALE

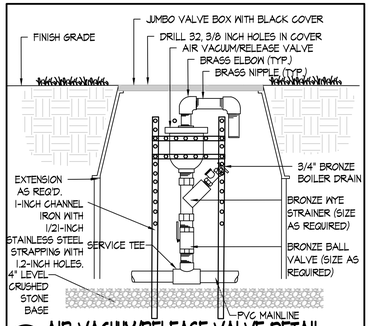

31 AIR VACUUM/RELEASE VALVE DETAIL
NO SCALE

RAIN SENSOR TO BE INSTALLED IN CONTACT WITH THE WEATHER AND NOT IN CONTACT WITH THE IRRIGATION SPRAY TO ENSURE PROPER OPERATION. CONTROLLER TO RECEIVE A DEDICATED RAIN SENSOR ON A DEDICATED PAIR OF #14 WIRES. LOCATION TO BE DETERMINED IN FIELD.

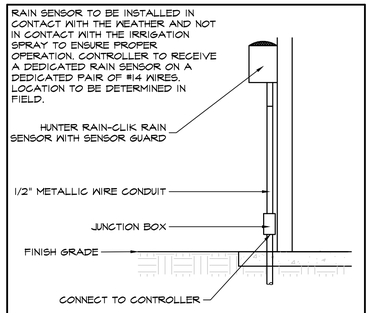

32 RAIN SENSOR MOUNTING DETAIL
NO SCALE

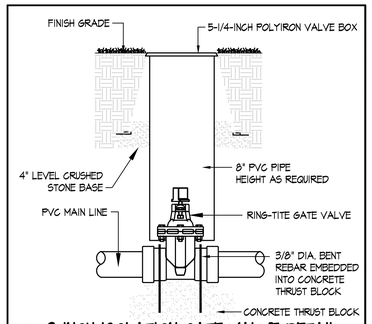

33 3 INCH ISOLATION GATE VALVE DETAIL
NO SCALE

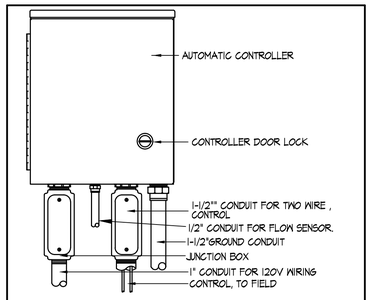

34 AUTOMATIC CONTROLLER DETAIL
NO SCALE

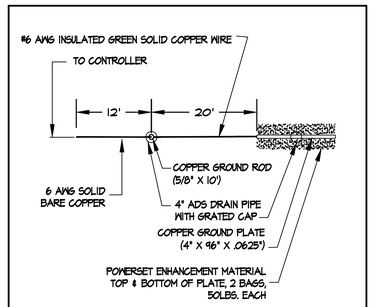

35 CONTROLLER GROUNDING DETAIL-PLAN
NO SCALE

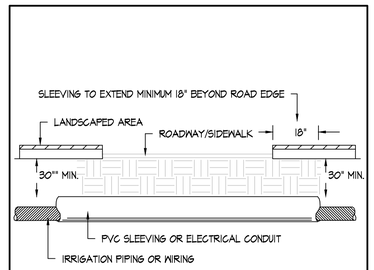

NOTE: PIPE AND WIRE TO BE INSTALLED IN SEPARATE SLEEVES ADJACENT TO EACH OTHER.

36 PIPE AND WIRE SLEEVE DETAIL
NO SCALE

SCALE: NO SCALE

Irrigation Consulting, Inc.
Providing innovative design solutions for irrigation worldwide.
20 Merrit Parkway
Nashua, NH 03062
(978) 683.8412
BVINCHES@IRRIGATIONCONSULTING.COM
112 S. Old Statesville Rd., Suite 104
Huntersville, NC 28078
(704) 849.3686

Project:
TOWN OF BROOKLINE, MA
CYPRESS STREET PLAYGROUND

Weston & Sampson
85 Devonshire Street,
3rd Floor, Boston, MA 02109
617.412.4480 800.SAMPSON
www.westonandsampson.com

Consultants:

Revisions:

No.	Date	Description

Seal:

Issued For:
CONSTRUCTION DOCUMENTS

Scale:	AS SHOWN
Date:	MAY 26, 2020
Drawn By:	SOG
Reviewed By:	BEV
Approved By:	BEV
W&S Project No:	2190095
W&S File No:	

Drawing Title:
IRRIGATION DETAILS

Sheet Number:
IR1.03

COPYRIGHT 2017 WESTON & SAMPSON

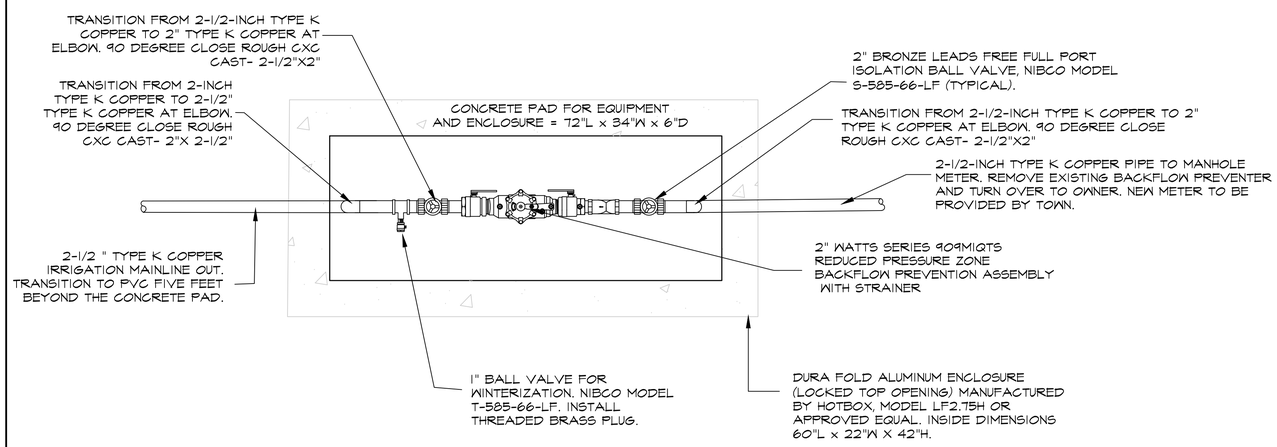

PLAN VIEW

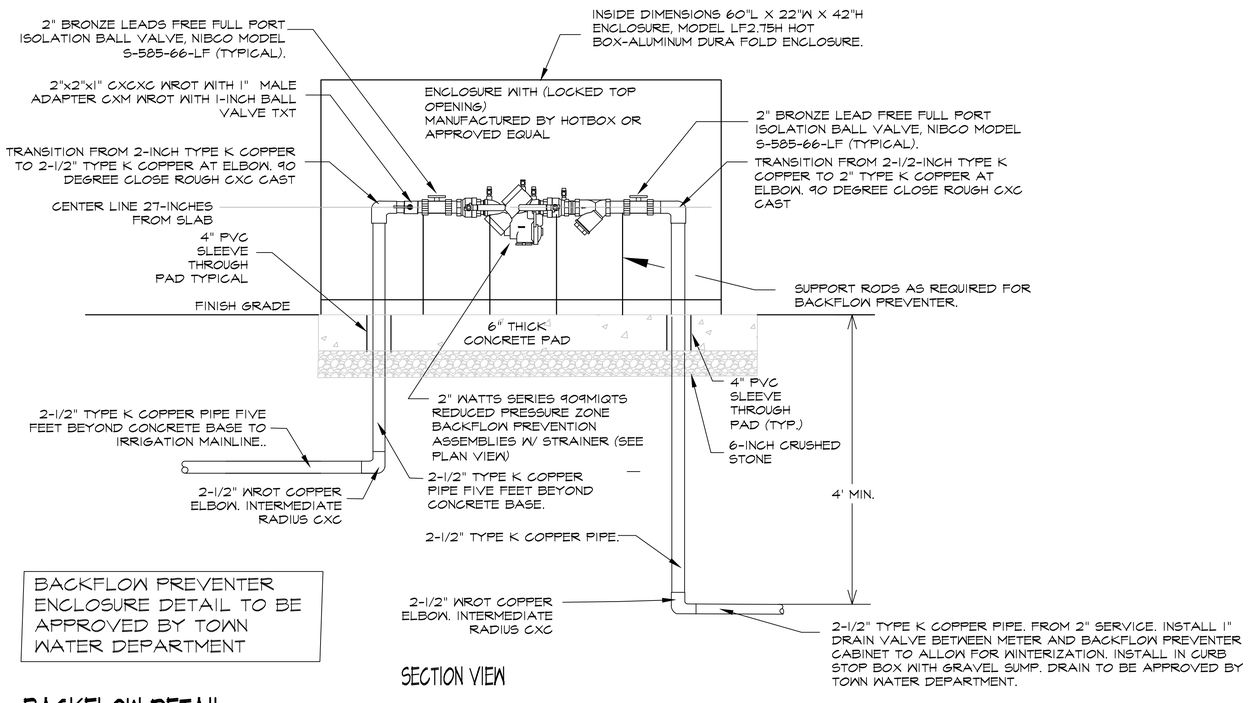

BACKFLOW PREVENTER ENCLOSURE DETAIL TO BE APPROVED BY TOWN WATER DEPARTMENT

SECTION VIEW

36 BACKFLOW DETAIL
NO SCALE

SCALE: NO SCALE

Irrigation Consulting, Inc.
Providing innovative design solutions for irrigation worldwide.
20 Merrit Parkway
Nashua, NH 03062
(978) 683.8412
BVINCHESI@IRRIGATIONCONSULTING.COM
112 S. Old Statesville Rd., Suite 104
Huntersville, NC 28078
(704) 843.3666

Project:
TOWN OF BROOKLINE, MA

CYPRESS STREET PLAYGROUND

Weston & Sampson
85 Devonshire Street,
3rd Floor, Boston, MA 02109
617.412.4480 800.SAMPSON
www.westonandsampson.com

Consultants:

Revisions:

No.	Date	Description

Seal:

Issued For:
CONSTRUCTION DOCUMENTS

Scale:	AS SHOWN
Date:	MAY 26, 2020
Drawn By:	SOG
Reviewed By:	BEV
Approved By:	BEV
W&S Project No:	2190095
W&S File No:	

Drawing Title:
IRRIGATION DETAILS

Sheet Number:
IR1.04

COPYRIGHT 2017 WESTON & SAMPSON

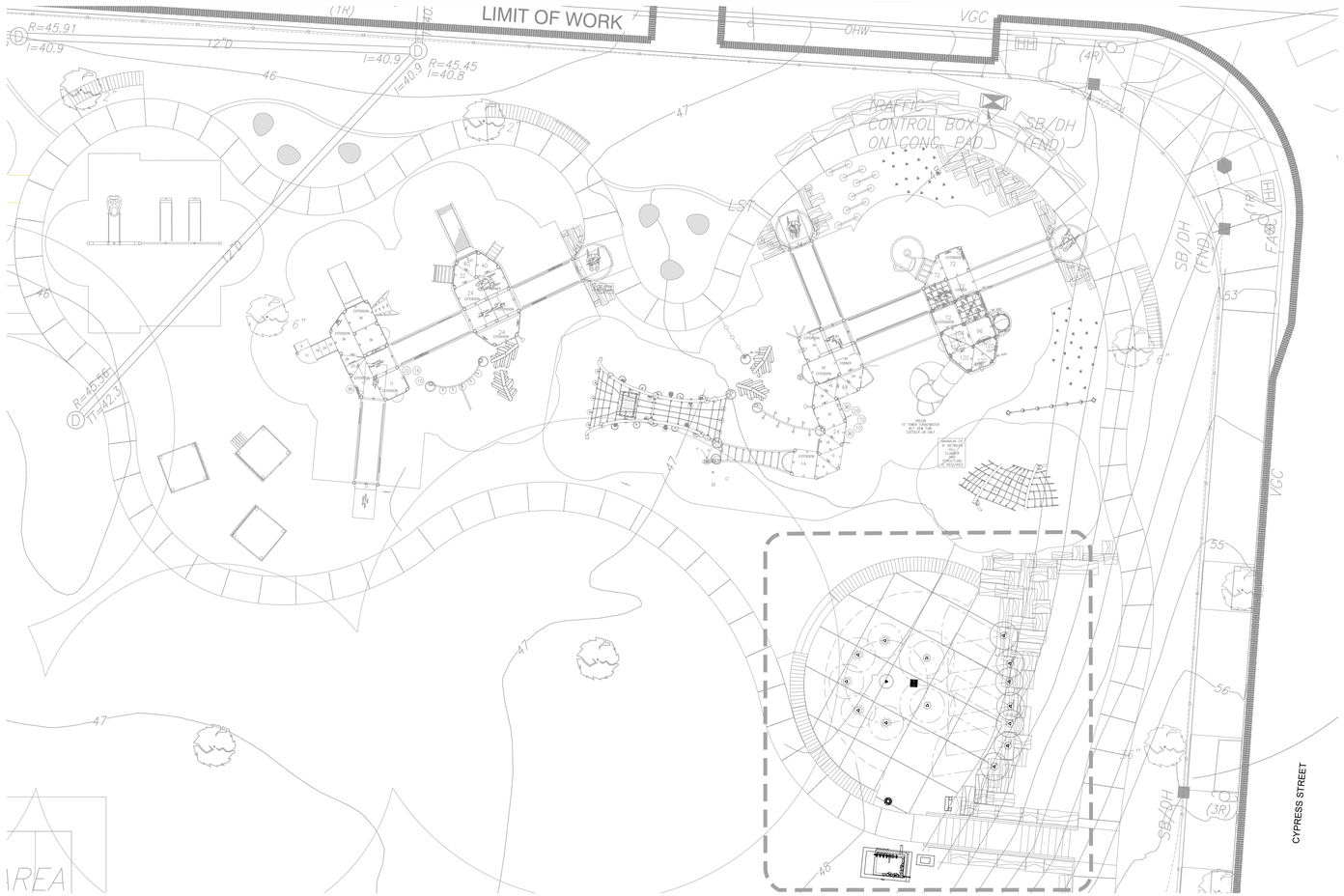

SCALE: 1" = 10'-0"

0 10 20 30

DESIGN CODE COMPLIANCE:

105 CMR 435.00 MASSACHUSETTS MINIMUM STANDARDS FOR SWIMMING POOLS...3/20/1998
AMERICAN NATIONAL STANDARDS FOR PUBLIC POOLS - ANSI/NSPI-1.....2014
AMERICAN NATIONAL STANDARDS FOR PUBLIC SPAS- ANSI/NSPI-2 2014
NATIONAL ELECTRICAL CODE(NFPA 70).....2011
VIRGINIA GRAEME BAKER POOL AND SPA SAFETY ACT.....2008
ADAAG.....2010

CONSTRUCTION NOTES

1. ALL WORK SHALL COMPLY WITH NATIONAL ELECTRIC CODE SECTION 680 AND ANY LOCAL REQUIREMENTS WHICH APPLY TO SPRAY DECK CONSTRUCTION.
2. SPRAY DECK CONTRACTOR SHALL ASSIST "BY OTHERS" TO ASSURE THAT OTHER TRADE PROVIDE HEALTH DEPARTMENT REQUIRED EQUIPMENT: SUCH AS, FILL WATER BACKFLOW PREVENTORS, HOSE BIBS, MECHANICAL VENTILATION, FLOOR DRAINS, LIGHTING, HOLDING TANKS, OR BACKWASH PIT.
3. ALL SPRAY DECK WORK CONCRETE SHALL BE 4,000 PSI, CONCRETE FOR DECKS 4,000 PSI, FOOTINGS 4,000 PSI AND WALLS 4,000 PSI, AND ANY MISCELLANEOUS SITE CONCRETE.
4. ALL REINFORCING SHALL BE GAGE 4x4-W4.0x4.0 WWR OR #4 BAR 12" ON CENTER EACH WAY UNLESS OTHERWISE NOTED.
5. SPRAY DECK VAULT CONCRETE FLOORS SHALL SLOPE TO DRAINS, SUMPS, OR DOORS.
6. ALL PVC PIPING EXPOSED TO UV LIGHT SHALL BE PAINTED.
7. ALL GRATES SHALL BE SECURED WITH NON CORROSIVE TAMPER PROOF SCREWS OR CEMENTED IN PLACE.
8. ALL FLOORS AND SPRAY DECKS SHALL BE PITCHED A MINIMUM OF 1/8" PER FOOT TO DECK DRAINS OR DECK PERIMETER.
9. PIPING IS SHOWN FOR CLARIFICATION AND MAY NOT SHOW EXACT ROUTING OR WIDTH, CONTRACTOR SHALL INSTALL PIPING WITH AS FEW CHANGES BASED UPON JOB SITE CONDITIONS.

GENERAL NOTES

1. DESIGN, CONSTRUCTION, AND MAINTENANCE OF THE SPRAY DECK AND RELATED FACILITY SHALL BE IN ACCORDANCE WITH THE MASSACHUSETTS PUBLIC HEALTH CODE, CHAPTER 105 CMR 435 MINIMUM STANDARDS FOR SWIMMING POOLS, BUILDING CODE, AND ALL THE RULES AND REGULATIONS OF DEPARTMENT OF HEALTH.
2. THE ENGINEER SHALL MAKE PERIODIC OBSERVATIONS OF THE SPRAY DECK CONSTRUCTION AS MAY BE NEEDED OR REQUIRED.
3. ALL HOSE BIBS SHALL BE PROVIDED WITH VACUUM BREAKERS.
4. ALL PROPOSED WORK IS SHOWN BOLD ON DRAWINGS.

ELECTRICAL NOTES

1. GROUND AND BOND ALL ELECTRICAL EQUIPMENT, SPRAY DECK REINFORCING, SPRAY DECK ACCESSORIES, AND PIPING IN ACCORDANCE WITH NATIONAL ELECTRIC CODE REQUIREMENTS, ARTICLE 680 OF THE ELECTRICAL CODE AND BY STATE AND LOCAL CODES HAVING JURISDICTION.
2. NO ELECTRICAL WIRING SHALL PASS OVERHEAD WITHIN A 20 FOOT HORIZONTAL DISTANCE OF THE SPRAY DECK.

HYDRAULIC NOTES

1. PIPING IS SHOWN PARTIALLY DIAGRAMMATIC. RUN PIPES IN FIELD CONDITIONS. THE ARRANGEMENT OF THE EQUIPMENT AND THE RUN OF PIPES WITHIN THE FILTER AREA SHALL BE FOLLOWED AS CLOSE AS POSSIBLE TO THAT AS IS SHOWN SO AS TO PROVIDE OPERATING AND MAINTENANCE SPACE AND REQUIRED HEAD ROOM.
2. ALL PIPING SHALL BE FULLY SUPPORTED IN ACCORDANCE WITH CODE REQUIREMENTS AND DETAILS ALLOWING FOR SEISMIC CONTROL.
3. HYDROSTATICALLY TEST ALL PRESSURE LINES AT 35 PSI FOR A PERIOD OF 2 HOURS, REPAIR ALL LEAKS, AND RE - TEST AS REQUIRED.
4. ALL SPRAY DECK AND FILTER PIPING SHALL BE SCHEDULE 80 PVC WITH PRESSURE RATED FITTINGS. (EXCEPT AS NOTED)
5. VALVES SHALL BE BUTTERFLY, OR BALL TYPE, RATED FOR 150 PSI MINIMUM WORKING PRESSURE.
6. PIPING IN SPRAY DECK VAULT SHALL BE CONNECTED WITH FLANGED JOINTS OR UNIONS TO FACILITATE REPAIRS.
7. A COMPREHENSIVE SET OF OPERATING INSTRUCTIONS SHALL BE PREPARED AND POSTED WHICH SHALL LIST EACH VALVE AND NUMBER IN CONJUNCTION WITH A SIMPLE HYDRAULIC DIAGRAM. INSTRUCTIONS SHALL BE GIVEN FOR FILLING SPRAY DECK, BACKWASHING, VACUUMING, DRAINING OF SPRAY DECK, CHEMICAL TREATMENT, AND FILTERING THE INSTRUCTIONS SHALL BE ENGAGED IN A CLEAR PLEXIGLAS FRAME, AND MOUNTED IN A PROMINENT PLACE IN THE SPRAY DECK VAULT.

COMPLIANCE REQUIREMENTS

1. THE PROPOSED DESIGN IS TO PROVIDE AN INTERACTIVE WATER PLAY FEATURE.
2. FOR PERMITTING PURPOSES, THIS INTERACTIVE WATER PLAY FEATURE SHALL BE PERMITTED IN ACCORDANCE WITH 105 CMR 435.400 - SPLASH PADS AND SPRAY DECKS.
3. THE PROPOSED SPRAY DECK IS OWNED BY TOWN OF BROOKLINE, MASSACHUSETTS.

OPERATIONAL AND TRAINING NOTES

1. CONTRACTOR'S OPERATING INSTRUCTIONS REQUIREMENTS AND COMPLETION DELIVERABLES:
   a. PROVIDE COMPLETE INSTRUCTIONS AND WRITTEN MANUALS TO THE SPRAY DECK OPERATOR.
   b. VALVE AND EQUIPMENT OPERATING INSTRUCTIONS WILL BE POSTED IN THE VAULT OR ENCLOSURE AND PROTECTED FROM WEATHER AND CHEMICALS.
   c. PROVIDE ONE TRAINING EVENT TO THE SPRAY DECK OPERATORS. AT THE CONCLUSION OF EACH TRAINING EVENT, THE CONTRACTOR SHALL SECURE THE SIGNATURE OF THE OPERATOR ON A TRAINING EVENT RECEIPT.

WATER NOTES

1. WATER FOR SPRAY DECK USE SHALL BE PROVIDED THROUGH THE EXISTING WATER SUPPLY SYSTEM. WATER SHALL BE INTRODUCED INTO THE SPRAY DECK THROUGH A FILL FUNNEL LOCATED REMOTE FROM THE SPRAY DECK WITH A 6" MINIMUM AIR GAP OR BACK FLOW PREVENTER.

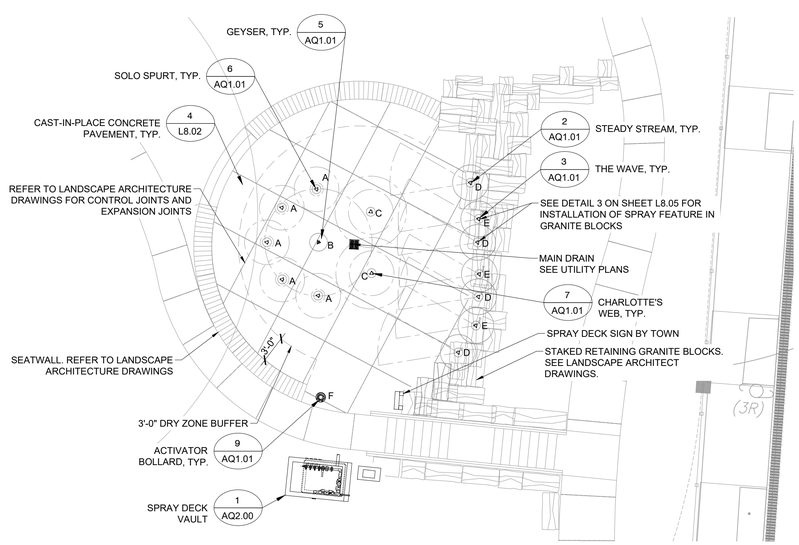

SPRAY DECK ENLARGEMENT

SCALE: 1/8" = 1'-0"

SCALE: 1/8" = 1'-0"

0 8 16 24

LEGEND

SPRAY ZONE

SPRAY DECK SIGN

THE ELECTRICAL CONTRACTOR SHALL GROUND AND BOND ALL ELECTRICAL EQUIPMENT, SPRAY DECK REINFORCING, SPRAY DECK ACCESSORIES, AND PIPING IN ACCORDANCE WITH NATIONAL ELECTRIC CODE REQUIREMENTS, ARTICLE 680. THE ELECTRICAL CONTRACTOR SHALL OBTAIN A COPY OF ALL APPLICABLE LOCAL STATE ELECTRICAL CODE REGULATIONS.

Project:

TOWN OF BROOKLINE, MA

CYPRESS STREET PLAYGROUND

Weston & Sampson

85 Devonshire Street,
3rd Floor, Boston, MA 02109
617.412.4480 800.SAMPSON
www.westonandsampson.com

Consultants:

Revisions:

No.	Date	Description

Seal:

COMMONWEALTH OF MASSACHUSETTS
JEFFERY F DUDROW
CIVIL
NO. 35285
REGISTERED PROFESSIONAL ENGINEER

Issued For:

CONSTRUCTION DOCUMENTS

Scale:	AS SHOWN
Date:	MAY 26, 2020
Drawn By:	SAA
Reviewed By:	MPM
Approved By:	JFB
W&S Project No:	2190095
W&S File No:	

Drawing Title:

SPRAY DECK LAYOUT AND NOTES

Sheet Number:

AQ1.00

COPYRIGHT 2020 WESTON & SAMPSON

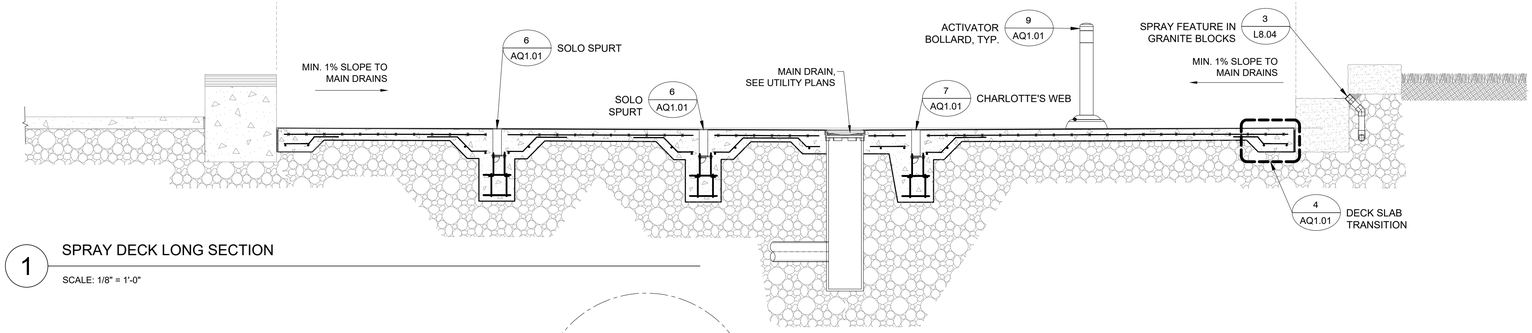

1 SPRAY DECK LONG SECTION

SCALE: 1/8" = 1'-0"

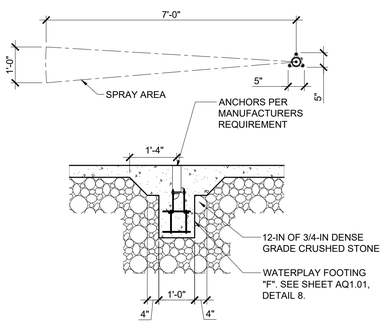

2 STEADY STREAM

SCALE: 1/2" = 1'-0"

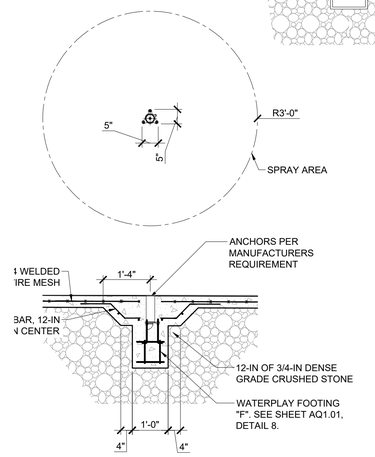

5 GEYSER

SCALE: 1/2" = 1'-0"

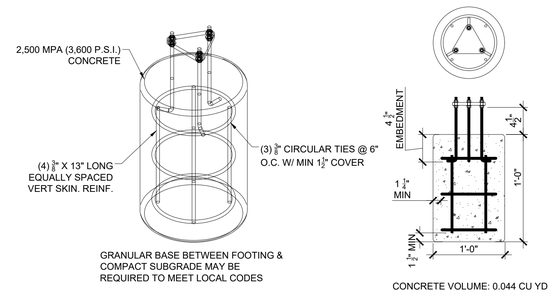

CONCRETE VOLUME: 0.044 CU YD

8 WATERPLAY FOOTING "F"

SCALE: 1" = 1'-0"

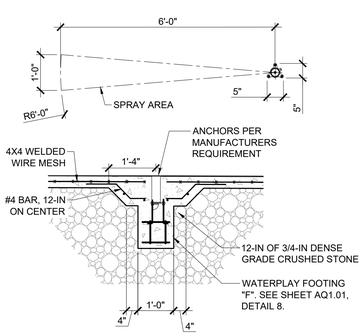

3 THE WAVE

SCALE: 1/2" = 1'-0"

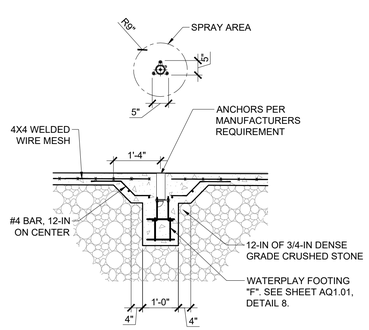

6 SOLO SPURT

SCALE: 1/2" = 1'-0"

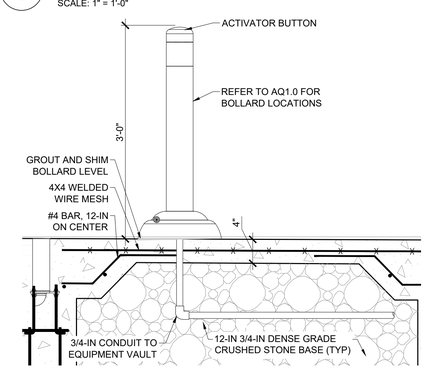

9 ACTIVATION BOLLARD

SCALE: 1" = 1'-0"

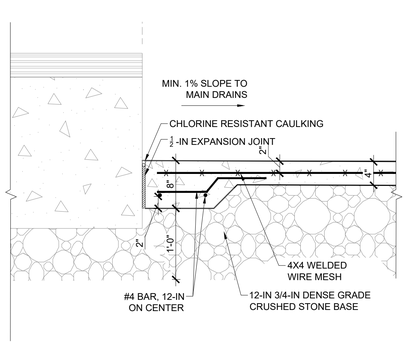

4 DECK SLAB TRANSITION

SCALE: 1" = 1'-0"

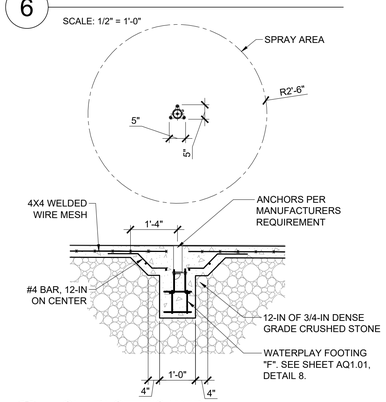

7 CHARLOTTE'S WEB

SCALE: 1/2" = 1'-0"

THE ELECTRICAL CONTRACTOR SHALL GROUND AND BOND ALL ELECTRICAL EQUIPMENT, SPRAY DECK REINFORCING, SPRAY DECK ACCESSORIES, AND PIPING IN ACCORDANCE WITH NATIONAL ELECTRIC CODE REQUIREMENTS, ARTICLE 680. THE ELECTRICAL CONTRACTOR SHALL OBTAIN A COPY OF ALL APPLICABLE LOCAL STATE ELECTRICAL CODE REGULATIONS.

Project:

TOWN OF BROOKLINE, MA

CYPRESS STREET PLAYGROUND

Weston & Sampson

85 Devonshire Street,
3rd Floor, Boston, MA 02109
617.412.4480 800.SAMPSON
www.westonandsampson.com

Consultants:

Revisions:

No.	Date	Description

Seal:

COMMONWEALTH OF MASSACHUSETTS JEFFERY F. LUDROW CIVIL No. 35265 REGISTERED PROFESSIONAL ENGINEER

Issued For:

CONSTRUCTION DOCUMENTS

Scale:	AS SHOWN
Date:	MAY 26, 2020
Drawn By:	SAA
Reviewed By:	MPM
Approved By:	JFB
W&S Project No:	2190095
W&S File No:	

Drawing Title:

SPRAY DECK SECTION AND DETAILS

Sheet Number:

AQ1.01

COPYRIGHT 2020 WESTON & SAMPSON

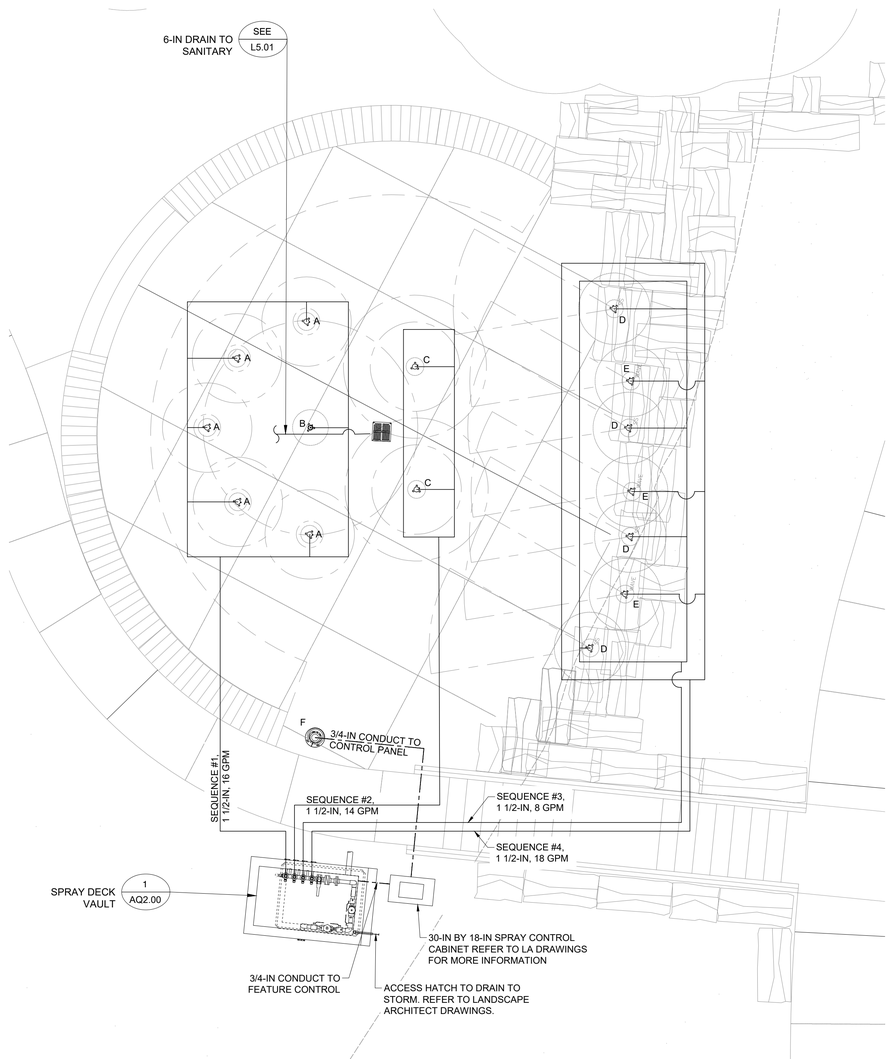

SPRAY DECK SITE PIPING

SCALE: 1/4" = 1'-0"

SCALE: 1/4" = 1'-0"

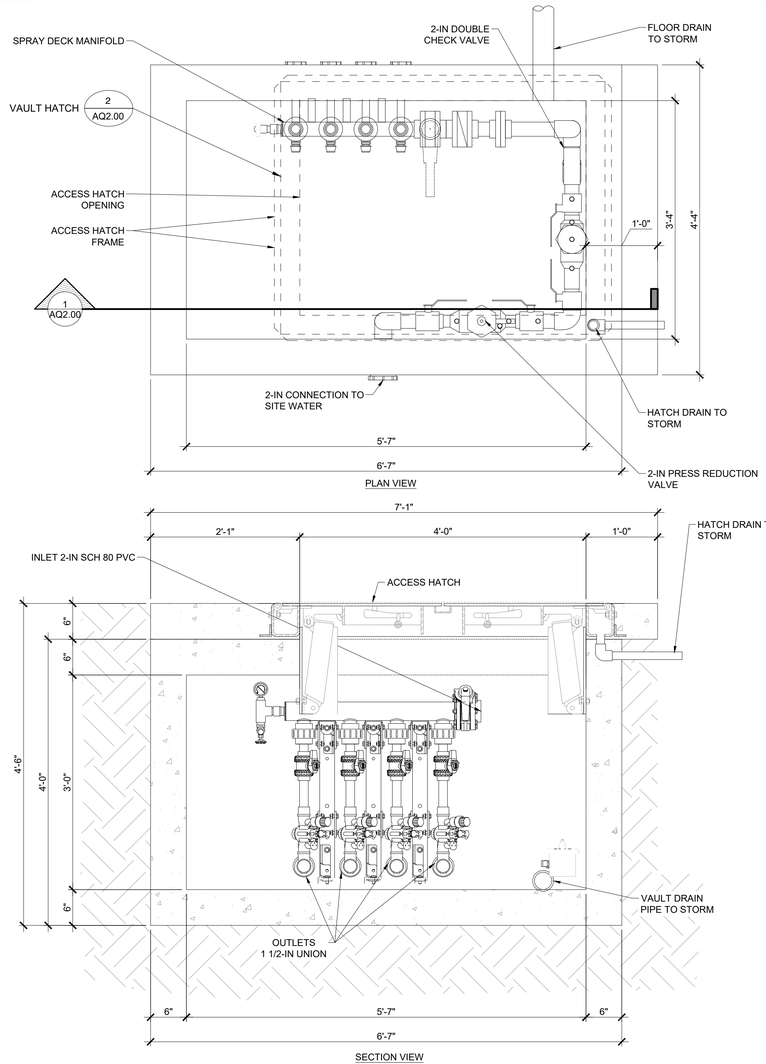

1 SPRAY DECK VAULT

SCALE: 1" = 1'-0"

SPRAY DECK EQUIPMENT REQUIREMENTS:

1. A COMPREHENSIVE SET OF OPERATING INSTRUCTIONS SHALL BE PREPARED AND POSTED WHICH SHALL LIST EACH VALVE AND NUMBER IN CONJUNCTION WITH A SIMPLE HYDRAULIC DIAGRAM. THE INSTRUCTIONS SHALL BE ENGAGED IN A CLEAR PLEXIGLAS FRAME AND MOUNTED IN A PROMINENT PLACE IN THE SPRAY DECK VAULT.
2. THE SPRAY DECK VAULT OR ENCLOSURE SHALL BE LOCKABLE.
3. THE VAULT FLOOR SHALL BE SLIP-RESISTANT AND SLOPED TO A FLOOR SUMP.
4. THE VAULT HATCH SHALL BE VERIFIED TO MAKE SURE THAT SPRAY DECK EQUIPMENT WILL FIT THROUGH HATCH OPENINGS.
5. ALL SPRAY DECK EQUIPMENT INDICATED IS APPROVED BY MANUFACTURER FOR INDICATED USE FOR OUTDOOR OR INDOOR.
6. CLEARANCE TO EQUIPMENT FROM WALLS SHALL BE AS SPECIFIED BY THE MANUFACTURER.

PIPING & VALVE REQUIREMENTS:

1. PIPING IS SHOWN PARTIALLY DIAGRAMMATIC. RUN PIPES IN FIELD CONDITIONS. THE ARRANGEMENT OF THE EQUIPMENT AND THE RUN OF PIPES WITHIN THE EQUIPMENT AREA SHOULD BE FOLLOWED AS CLOSE AS POSSIBLE TO THE ARRANGEMENT SHOWN IN THE DRAWINGS, SO AS TO PROVIDE OPERATING AND MAINTENANCE SPACE AND REQUIRED HEAD ROOM.
2. ALL SPRAY DECK AND FILTER PIPING TO BE SCHEDULE 80 PVC WITH PRESSURE RATED FITTINGS (EXCEPT AS NOTED).
3. ALL PIPING SHALL BE FULLY SUPPORTED IN ACCORDANCE WITH CODE REQUIREMENTS AND DETAILS ALLOWING FOR SEISMIC CONTROL.
4. ALL U.V. EXPOSED PVC PIPING WILL BE PAINTED PER A COLOR CODE, COLOR ARROW POINTING IN FLOW DIRECTION WITH 1-INCH WRITING ARE ACCEPTABLE ALTERNATE.
5. TAG ALL VALVES, LABEL ALL PIPES AND POST OPERATING INSTRUCTION INSIDE THE ROOM.
6. PROVIDE VALVE SCHEDULE MATCHING ALL TAGS. VALVE TAGS SHALL BE 2" DIAMETER BRASS OR CYCOLAC PLASTIC AND ATTACHED TO VALVES WITH STEEL "S" HOOKS OR APPROVED EQUAL.
7. ALL FILTER FACE PIPING SHALL BE PVC SCHEDULE 80 NSF-PW. ALL JOINTS SHALL BE NON-THREADED SOLVENT WELD TYPE.
8. GATE VALVES SHALL NOT BE USED AS A MEANS FOR CONTROLLING THE FLOW OF WATER. ONLY WINTER CONDITIONS.
9. ALL VALVES 3-INCH & SMALLER SHALL BE SPEARS TRUE UNION OR EQUIVALENT RATED FOR 150 PSI MINIMUM WORKING PRESSURE OR APPROVED EQUAL.
10. ALL VALVES 4-INCH & LARGER SHALL BE EPDM BUTTERFLY VALVES OR GATE VALVES RATED FOR 150 PSI MINIMUM WORKING PRESSURE.
11. ALL GAUGES SHALL HAVE 2 1/2-INCH DIAL.
12. SUPPORT ALL PIPING WITH UNISTRUT FRAME FROM EQUIPMENT FLOOR OR ATTACHED TO CEILING AS NEEDED FOR PROPER PIPE SUPPORT OR EQUIVALENT

KEY LETTER	FEATURE	QUANTITY	PER FEATURE		
			FLOW RATE	PIPE SIZE	VELOCITY
A	SOLO SPURT	5	2 GPM	1 1/2 INCH	0.38 FPS
B	GEYSER	1	6 GPM	1 1/2 INCH	1.13 FPS
C	CHARLOTTE'S WEB	2	7 GPM	1 1/2 INCH	1.31 FPS
D	STEADY STREAM	4	2 GPM	1 1/2 INCH	0.38 FPS
E	THE WAVE	3	6 GPM	1 1/2 INCH	0.56 FPS
F	ACTIVATION BOLLARD	2	-	-	-

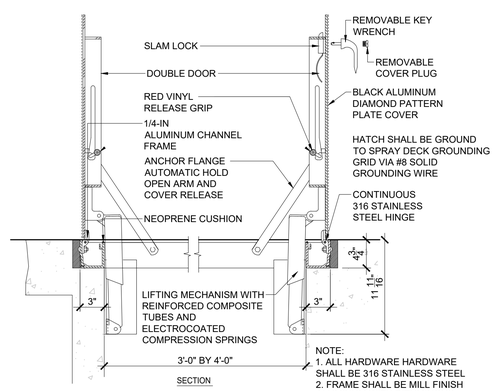

NOTE:
1. ALL HARDWARE HARDWARE SHALL BE 316 STAINLESS STEEL
2. FRAME SHALL BE MILL FINISH ALUMINUM WITH BITUMINOUS COATING
3. HATCH SHALL BE H-20 RATED

2 VAULT HATCH

SCALE: N.T.S.

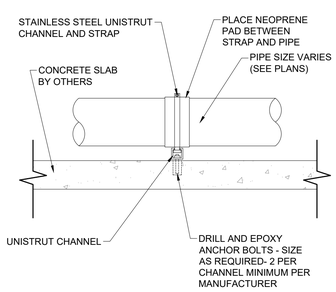

NOTE:
1. USE TO SUPPORT FROM WALL AND FLOOR

3 PIPE SUPPORT

SCALE: N.T.S.

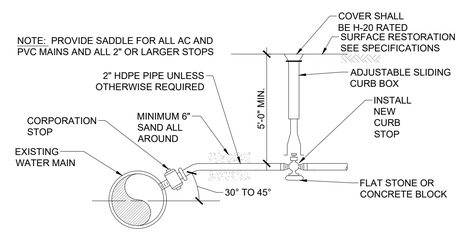

NOTE: UTILIZE CONCRETE THRUST BLOCKS AT ANY FITTINGS OR CORPORATION CONNECTIONS.

4 WATER CONNECTION

SCALE: N.T.S.

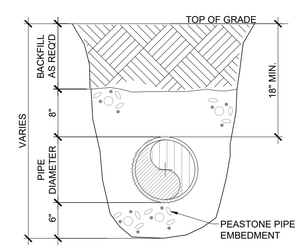

5 BURIED PIPE

SCALE: N.T.S.

THE ELECTRICAL CONTRACTOR SHALL GROUND AND BOND ALL ELECTRICAL EQUIPMENT, SPRAY DECK REINFORCING, SPRAY DECK ACCESSORIES, AND PIPING IN ACCORDANCE WITH NATIONAL ELECTRIC CODE REQUIREMENTS, ARTICLE 680. THE ELECTRICAL CONTRACTOR SHALL OBTAIN A COPY OF ALL APPLICABLE LOCAL STATE ELECTRICAL CODE REGULATIONS.

Project:

TOWN OF BROOKLINE, MA

CYPRESS STREET PLAYGROUND

Weston & Sampson

85 Devonshire Street,
3rd Floor, Boston, MA 02109
617.412.4480 800.SAMPSON
www.westonandsampson.com

Consultants:

Revisions:

No.	Date	Description

Seal:

COMMONWEALTH OF MASSACHUSETTS
JEFFERY F. LUDROW
CIVIL
No. 35265
REGISTERED PROFESSIONAL ENGINEER

Issued For:

CONSTRUCTION DOCUMENTS

Scale:	AS SHOWN
Date:	MAY 26, 2020
Drawn By:	SAA
Reviewed By:	MPM
Approved By:	JFB
W&S Project No:	2190095
W&S File No:	

Drawing Title:

SPRAY DECK SITE PIPING

Sheet Number:

AQ2.00

COPYRIGHT 2020 WESTON & SAMPSON

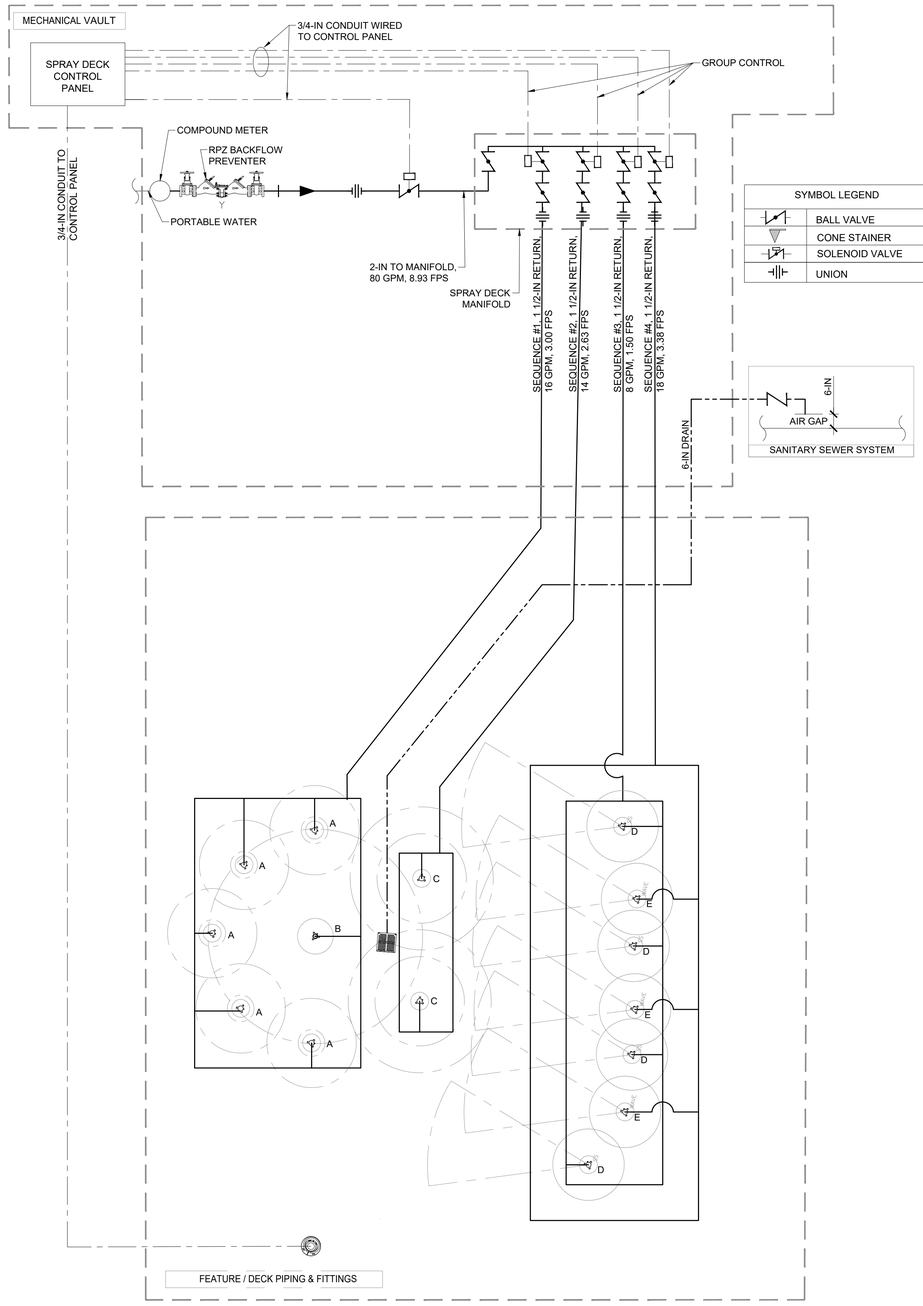

SYMBOL LEGEND	
	BALL VALVE
	CONE STAINER
	SOLENOID VALVE
	UNION

SPRAY DECK EQUIPMENT SCHEDULE

MISCELLANEOUS EQUIPMENT

QTY	ITEM	MANUFACTURER	CAT NO.	DESCRIPTION
1	CONCRETE VAULT	PHOENIX PRECAST PRODUCTS	CUSTOM PER DETAIL	PRECAST CONCRETE VAULT INSIDE 5'-7" BY 3'-4" BY 3'-0" DEEP WITH 3-FT BY 4-FT TANK HATCH OPENING, AND ALL PIPE SLEEVES PER PIPING PLANS.
1	ACCESS HATCH	BILCO	JDAL	DUAL LEAF HATCH WITH 300 POUNDS PER SQUARE FOOT LOAD RATING, ALUMINUM FRAME, 1-IN PAN TO ACCEPT CONCRETE INFILL TO MATCH SURROUNDING DECK, T-316 STAINLESS HARDWARE

SPRAY DECK EQUIPMENT

QTY	ITEM	MANUFACTURER	CAT NO.	DESCRIPTION
1	GEYSER	WATERPLAY	C02-312	ADJUSTABLE PRECISION JET, GROUND SPRAY INSTALLED IN PRE-MANUFACTURED MANIFOLD THAT INCLUDES WATER FEED CONNECTION
4	STEADY STREAM	WATERPLAY	0010-3833	ADJUSTABLE PRECISION JET, GROUND SPRAY INSTALLED IN PRE-MANUFACTURED MANIFOLD THAT INCLUDES WATER FEED CONNECTION
2	CHARLOTTE'S WEB	WATERPLAY	C02-309	ADJUSTABLE PRECISION JET, GROUND SPRAY INSTALLED IN PRE-MANUFACTURED MANIFOLD THAT INCLUDES WATER FEED CONNECTION
5	SOLO SPURT	WATERPLAY	C02-337	ADJUSTABLE PRECISION JET, GROUND SPRAY INSTALLED IN PRE-MANUFACTURED MANIFOLD THAT INCLUDES WATER FEED CONNECTION
3	THE WAVE	WATERPLAY	C02-341	ADJUSTABLE PRECISION JET, GROUND SPRAY INSTALLED IN PRE-MANUFACTURED MANIFOLD THAT INCLUDES WATER FEED CONNECTION
1	ACTIVATION BOLLARD	WATERPLAY	0010-1854	ACTIVATION BOLLARD, CONTROLS THE ON AND OFF FEATURES OF THE SPRAY PAD
1	FEATURE CONTROL PANEL	WATERPLAY	CUSTOM	CONTROLS FOUNTAIN SPRAY FEATURES, LIGHTING, WATER CONTROL, WIND CONTROL AND CONTAINING A TOUCH SCREEN PANEL.
1	CUSTOM MANIFOLD	WATERPLAY	CUSTOM	6 PORT MANIFOLD WITH SOLENOID VALVES

SPRAY DECK DATA

DESCRIPTION	AMOUNT / RATE
TOTAL SPRAY DECK SURFACE	782 S.F.
TOTAL FLOW	56 GPM

THE ELECTRICAL CONTRACTOR SHALL GROUND AND BOND ALL ELECTRICAL EQUIPMENT, SPRAY DECK REINFORCING, SPRAY DECK ACCESSORIES, AND PIPING IN ACCORDANCE WITH NATIONAL ELECTRIC CODE REQUIREMENTS, ARTICLE 680. THE ELECTRICAL CONTRACTOR SHALL OBTAIN A COPY OF ALL APPLICABLE LOCAL STATE ELECTRICAL CODE REGULATIONS.

Project:

TOWN OF BROOKLINE, MA

CYPRESS STREET PLAYGROUND

Weston & Sampson

85 Devonshire Street,
3rd Floor, Boston, MA 02109
617.412.4480 800.SAMPSON
www.westonandsampson.com

Consultants:

Revisions:

No.	Date	Description

Seal:

COMMONWEALTH OF MASSACHUSETTS
JEFFERY F. TUDROW
CIVIL
NO. 35265
REGISTERED PROFESSIONAL ENGINEER

Issued For:

CONSTRUCTION DOCUMENTS

Scale:	AS SHOWN
Date:	MAY 26, 2020
Drawn By:	SAA
Reviewed By:	MPM
Approved By:	JFB
W&S Project No:	2190095
W&S File No:	

Drawing Title:

SPRAY DECK PIPING SCHEMATIC & EQUIPMENT SCHEDULE

Sheet Number:

AQ2.01

COPYRIGHT 2020 WESTON & SAMPSON

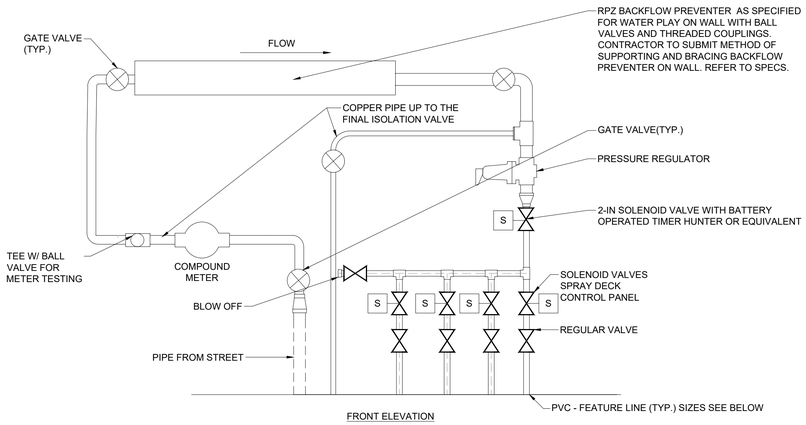

FRONT ELEVATION

NOTE:
1. INSTALL A BRASS BLOWOFF FITTING AND VALVE ON THE OUTFLOW SIDE OF THE BACKFLOW PREVENTION DEVICE TO WINTERIZE THE SYSTEM AS REQUIRED.
2. THE BACKFLOW PREVENTER & METER SHALL BE INSTALLED WITH UNIONS, HANGERS, SUPPORTS AND ALL OTHER APPROPRIATE FITTINGS, IN ORDER TO EASILY REMOVE THE DEVICE FOR SERVICE AND TO MEET ALL APPLICABLE PLUMBING CODES.
3. CONFIRM LAYOUT AND ALIGNMENT REQUIREMENTS FOR ALL PIPING, FITTINGS, VALVES, METER, AND BACKFLOW PREVENTER WITH CITY OF NEEDHAM PLUMBING INSPECTOR PRIOR TO INSTALLATION.

1 SPRAY DECK MANIFOLD

SCALE: N.T.S.

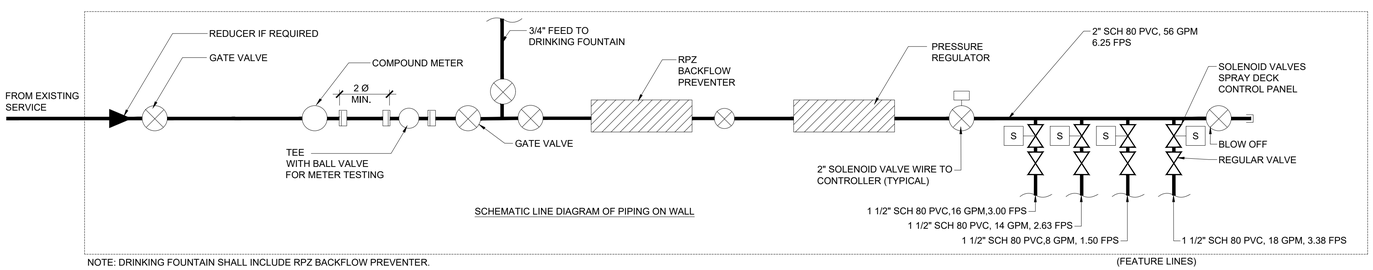

SCHEMATIC LINE DIAGRAM OF PIPING ON WALL

NOTE: DRINKING FOUNTAIN SHALL INCLUDE RPZ BACKFLOW PREVENTER.

(FEATURE LINES)

2 BACKFLOW PREVENTER AND WATER CONNECTION ON WALL

SCALE: N.T.S.

THE ELECTRICAL CONTRACTOR SHALL GROUND AND BOND ALL ELECTRICAL EQUIPMENT, SPRAY DECK REINFORCING, SPRAY DECK ACCESSORIES, AND PIPING IN ACCORDANCE WITH NATIONAL ELECTRIC CODE REQUIREMENTS, ARTICLE 680. THE ELECTRICAL CONTRACTOR SHALL OBTAIN A COPY OF ALL APPLICABLE LOCAL STATE ELECTRICAL CODE REGULATIONS.

Project:
TOWN OF BROOKLINE, MA

CYPRESS STREET PLAYGROUND

Weston & Sampson
85 Devonshire Street,
3rd Floor, Boston, MA 02109
617.412.4480 800.SAMPSON
www.westonandsampson.com

Consultants:

Revisions:

No.	Date	Description

Seal:

COMMONWEALTH OF MASSACHUSETTS
JEFFERY F. TUDROW
CIVIL
NO. 35265
REGISTERED PROFESSIONAL ENGINEER

Issued For:
CONSTRUCTION DOCUMENTS

Scale:	AS SHOWN
Date:	MAY 26, 2020
Drawn By:	SAA
Reviewed By:	MPM
Approved By:	JFB
W&S Project No:	2190095
W&S File No:	

Drawing Title:
SPRAY DECK MECHANICAL DETAILS

Sheet Number:
AQ2.02

COPYRIGHT 2020 WESTON & SAMPSON

ELECTRICAL LEGEND

RACEWAY AND WIRING

PPL1-1,3 — HOMERUN TO PANELBOARD. NUMBER OF TICKS INDICATES NUMBER OF #12 AWG CONDUCTORS CONTAINED IN RACEWAY. TWO (2) #12 AWG SHALL NOT BE INDICATED BY TICKS. NUMERALS 1 AND 3 INDICATE CIRCUITS IN PANELBOARD. RACEWAYS LARGER THAN 1/2" AND CONDUCTORS LARGER THAN #12 AWG SHALL BE INDICATED ON THE DRAWINGS. PROVIDE AN INSULATED GREEN GROUND WIRE IN ALL RACEWAYS MINIMUM SIZE TO BE #12AWG.

OH — WIRE RUN OVERHEAD

CONDUIT RUN ABOVE GROUND

CONDUIT RUN UNDERGROUND

LIGHTING FIXTURES

SPORTS LIGHTING FIXTURE

LIGHTING CONTROL SWITCHES

(MOUNT 4'-0" AFF UNLESS NOTED OTHERWISE.)

SWP — WEATHERPROOF SINGLE-POLE SWITCH. MOUNTING HEIGHT 48"AFF.

STM — TIMER SWITCH - MOUNTING HEIGHT 48" AFF

R — LOW VOLTAGE RELAY CONTROLLING LIGHTING FIXTURES

C* — LIGHTING CONTACTOR. *INDICATES CONTACT

RECEPTACLES

(MOUNT 18" AFF TO CENTER LINE UNLESS NOTED OTHERWISE)

DUPLEX CONVENIENCE OUTLET RATED 20A, 125V, U-SLOT GROUNDED TYPE MOUNTED 18" ABOVE FINISHED FLOOR TO CENTER LINE. ALL OTHER MOUNTING HEIGHTS SHALL BE AS NOTED ADJACENT TO THE SYMBOL. REFER TO RECEPTACLE ABBREVIATIONS FOR SPECIAL PURPOSE RECEPTACLES.

MISCELLANEOUS POWER

J — JUNCTION BOX WITH BLANK COVERPLATE, SIZE AS REQUIRED BY N.E.C.

PB — PULL BOX. TYPE AS NOTED ON THE DRAWINGS OR AS REQUIRED BY N.E.C.

HH — HANDHOLE (COVER SHALL BE LABELED "POWER, LIGHTING, COMMUNICATIONS")

POWER DISTRIBUTION EQUIPMENT

DISTRIBUTION PANEL

PANELBOARD-SURFACE MOUNTED

TVSS — SURGE SUPPRESSION UNIT

ABBREVIATIONS

AFF	ABOVE FINISHED FLOOR
AC	ALTERNATING CURRENT
A	AMPERE
ATC	AUTOMATIC TEMPERATURE CONTROLS
ATS	AUTOMATIC TRANSFER SWITCH
BKR	BREAKER
C	CONDUIT
CKT	CIRCUIT
CB	CIRCUIT BREAKER
EC	ELECTRICAL CONTRACTOR
EMT	ELECTRIC METALLIC TUBING
EWC	ELECTRIC WATER COOLER
EWH	ELECTRIC WATER HEATER
EF	EXHAUST FAN
FL	FLOOR
FLA	FULL LOAD AMPERE
GC	GENERAL CONTRACTOR
GFI	GROUND FAULT INTERRUPTER
GND	GROUND
HOA	HAND OFF AUTOMATIC
HP	HORSEPOWER
IG	ISOLATED GROUND
JB	JUNCTION BOX
KVA	KILOVOLT AMPERES
KW	KILOWATT
MCB	MAIN CIRCUIT BREAKER
MLO	MAIN LUGS ONLY
MC	MECHANICAL CONTRACTOR
MTD	MOUNTED
MTG	MOUNTING
NMC	NON-METALLIC CONDUIT
NC	NORMALLY CLOSED
NO	NORMALLY OPEN
NA	NOT APPLICABLE
NIC	NOT IN CONTRACT
NTS	NOT TO SCALE
PNL	PANELBOARD
PH	PHASE
PVC	POLYVINYL CHLORIDE CONDUIT
RSC	RIGID GALVANIZED STEEL CONDUIT
SF	SUPPLY FAN
SS	SAFETY SWITCH
TEL	TELEPHONE
TRF	TRANSFORMER
V	VOLTS
W	WATTS OR WIRE
WP	WEATHERPROOF
4WSN	4-WIRE SOLID NEUTRAL

RECEPTACLE ABBREVIATIONS

GFI	GROUND FAULT CIRCUIT INTERUPTER, PERSONAL PROTECTION
WP	WEATHERPROOF RECEPTACLE WITH COVERPLATE LISTED FOR WET LOCATION WITH AN ATTACHMENT PLUG INSERTED.

GENERAL NOTES

1. DRAWINGS ARE DIAGRAMMATIC ONLY. THE EXACT LOCATION, MOUNTING HEIGHTS, SIZE OF EQUIPMENT AND ROUTING OF RACEWAYS SHALL BE COORDINATED AND DETERMINED IN THE FIELD.
2. ALL STRAIGHT FEEDERS, BRANCH CIRCUITS AND AUXILIARY SYSTEM CONDUIT RUNS SHALL BE PROVIDED WITH SUFFICIENT HANDHOLES/PULL BOXES TO LIMIT THE MAXIMUM LENGTH OF ANY SINGLE CABLE PULL TO 200 FEET OR NO MORE THAN (3) 90 DEGREE BENDS. EXACT SIZES OF HANDHOLES/PULL BOXES AND LOCATIONS TO BE DETERMINED IN THE FIELD BY THE ELECTRICAL CONTRACTOR.
3. THE ELECTRICAL CONTRACTOR SHALL COORDINATE WITH THE GENERAL CONTRACTOR AS APPLICABLE AS TO THE EXACT LOCATION OF THEIR RESPECTIVE EQUIPMENT; THE POWER WIRING, CONTROL WIRING AND ALL ELECTRICAL CONNECTIONS AND CONDUIT TURN-UPS SHALL BE COORDINATED WITH THE RESPECTIVE CONTRACTORS BEFORE THE START OF CONSTRUCTION IN THE FIELD.
4. WORK SHALL CONFORM TO THE MASSACHUSETTS ELECTRICAL CODE, MASSACHUSETTS BUILDING CODE, NFPA AND REQUIREMENTS OF LOCAL AUTHORITIES HAVING JURISDICTION.
5. THE WORD "CONTRACTOR" AS USED IN THE "ELECTRICAL WORK" SHALL MEAN THE ELECTRICAL SUBCONTRACTOR.
6. CONTRACTOR SHALL PAY FOR ALL PERMITS, INSURANCE AND TESTS, AND SHALL PROVIDE LABOR AND MATERIAL TO COMPLETE THE ELECTRICAL WORK SHOWN.
7. CONTRACTOR SHALL PAY ELECTRIC UTILITY COMPANY BACK CHARGES
8. CONTRACTOR SHALL PROVIDE ALL REQUIRED COORDINATION WITH EVERSOURCE AND OTHER UTILITIES AS REQUIRED.
9. ELECTRIC UTILITY WORK ORDER NUMBER FOR THIS PROJECT IS #2383830.
10. EXCEPT AS OTHERWISE NOTED, THE ELECTRICAL WORK SHALL INCLUDE PANELBOARDS, CIRCUIT BREAKERS, FEEDERS, WIRING, RACEWAYS, LIGHTING FIXTURES, OUTLETS AND TRANSFORMERS.
11. THE CONTRACTOR SHALL PROVIDE ALL TEMPORARY LIGHTING AND POWER AND THE GENERAL CONTRACTOR SHALL PAY ALL ENERGY CHARGES FOR TEMPORARY POWER AND LIGHTING.
12. DURING CONSTRUCTION, THE ELECTRICAL CONTRACTOR SHALL KEEP HIS PORTION OF THE WORK NEAT, CLEAN AND ORDERLY.
13. ALL SYSTEMS SHALL BE TESTED FOR SHORT CIRCUIT AND GROUNDS PRIOR TO ENERGIZING AND ANY DEFECTS SHALL BE CORRECTED.
14. ALL CUTTING AND PATCHING REQUIRED FOR ELECTRICAL WORK SHALL BE INCLUDED AS PART OF THIS SECTION.
15. COMPLETE SHOP DRAWINGS SHALL BE SUBMITTED FOR ELECTRICAL EQUIPMENT. WHERE SPECIFIED ELECTRICAL EQUIPMENT IS SUBSTITUTED, THE ELECTRICAL CONTRACTOR SHALL SUBMIT COMPLETE SPECIFICATIONS ON THE SUBSTITUTE AS WELL AS THE ITEM ORIGINALLY SPECIFIED.
16. MATERIALS SHALL BE SPECIFICATION GRADE AND UL LISTED.
17. WHERE MATERIAL IS CALLED OUT IN THE LEGEND BY MANUFACTURER, TYPE OR CATALOG NUMBER, SUCH DESIGNATIONS ARE TO ESTABLISH STANDARDS OR DESIRED QUALITY. ACCEPTANCE OR REJECTIONS OF PROPOSED SUBSTITUTIONS SHALL BE SUBJECT TO THE APPROVAL OF THE OWNER.
18. WORK SHALL BE COORDINATED WITH THAT OF OTHER TRADES TO ELIMINATE INTERFERENCES.
19. ELECTRICAL CONTRACTOR SHALL OBTAIN SHOP DRAWINGS/SPECIFICATIONS OF ALL EQUIPMENT FROM THE GENERAL CONTRACTOR PRIOR TO PURCHASING AND INSTALLING ELECTRICAL EQUIPMENT FOR SAME. NOTIFY ENGINEER OF ANY DISCREPANCIES BETWEEN ACTUAL EQUIPMENT INSTALLED AND CONTRACT DOCUMENTS.
20. ELECTRICAL WORK SHALL BE GUARANTEED FOR A PERIOD OF ONE YEAR FROM DATE OF FINAL COMPLETION.
21. WORK SHALL BE GROUNDED IN ACCORDANCE WITH CODE REQUIREMENTS. COMPLETE EQUIPMENT (INSULATED GREEN WIRE) GROUNDING SYSTEM SHALL BE INSTALLED.
22. WIRE SHALL BE TYPE "THHN-THWN" INSULATED FOR 600 VOLTS, MINIMUM SIZE #12 AWG COPPER UNLESS SPECIFICALLY NOTED OTHERWISE.
23. WIRING METHODS:
    a. EXTERIOR UNDERGROUND FEEDERS SHALL BE PVC SCHEDULE 80 FOR DIRECT BURIED AND PVC SCHEDULE 40 FOR CONCRETE ENCASED.
    b. EXTERIOR ABOVE GRADE FEEDERS SHALL BE RGS CONDUIT.
    c. INTERIOR CABINET FEEDERS SHALL BE RGS CONDUIT.
24. CONNECTORS FOR RIGID CONDUIT SHALL BE MADE WITH THREADED COUPLINGS.
25. BOXES SHALL BE GALVANIZED STEEL AND SHALL BE SIZED TO ACCOMMODATE THE EQUIPMENT OR APPARATUS TO BE INSTALLED. WHERE BOXES OF A STANDARD MAKE ARE NOT AVAILABLE, SPECIAL BOXES SHALL BE MANUFACTURED. FIXTURES SUPPORTED ON THE CEILING OR ON THE WALL SHALL HAVE SUITABLE FIXTURE SUPPORT FOR THE SPECIFIC FIXTURE.
26. PANELBOARDS SHALL BE DEAD FRONT, THERMAL MAGNETIC BOLT-ON CIRCUIT BREAKER TYPE, DESIGNED FOR SURFACE OR FLUSH MOUNTING AS INDICATED ON PLAN, AND HAVING CONNECTIONS TO 120/208 OR 277/480 VOLT, 3 PHASE, 4 WIRE SERVICE. ALL BUS BARS SHALL BE COPPER. CABINETS SHALL BE MADE OF CODE GAUGE GALVANIZED SHEET STEEL, WITH A MINIMUM OF 4 INCH GUTTERS, DOOR IN DOOR CONSTRUCTION, LOCKED DOOR, AND FLUSH HINGES. TYPEWRITTEN INDEX SHALL BE MOUNTED ON DOOR INSIDE TRANSPARENT COVER INDICATING LOAD SERVED. PANELS SHALL INCLUDE SEPARATE EQUIPMENT GROUND BUS.
27. PANELBOARDS, DISCONNECT SWITCHES, AND CONTROLLERS SHALL HAVE NAMEPLATES OF BLACK LAMINATED PLASTIC WITH ENGRAVED WHITE LETTERS, SECURED WITH SELF-TAPPING SCREWS.
28. CONTRACTOR SHALL PHASE BALANCE PANELBOARDS IN THE FIELD. LOAD ON EACH PHASE SHALL BE BALANCED WITHIN 10% OF EACH OTHER.
29. WALL PLATES SHALL BE PROVIDED FOR EACH SWITCH AND RECEPTACLE OUTLET. PROVIDE CAST IRON OR ALLOY OF SUITABLE TYPE TO MATCH OUTLET BOXES SPECIFIED.
30. TOGGLE SWITCHES SHALL BE OF THE SINGLE POLE A.C. QUIET TOGGLE TYPE FOR MOUNTING IN A SINGLE-GANG SPACING. TOGGLE SWITCHES SHALL BE FULLY RATED 20 AMPERES AT 120/277 VOLT.
31. DUPLEX RECEPTACLES SHALL BE 2 POLE, 3 WIRE, GROUNDING TYPE 20 AMPERE, 125 VOLT WITH METAL PLASTER EARS. RECEPTACLES SHALL BE NEMA STANDARD CONFIGURATION 5-20R.
32. FUSED OR UNFUSED SAFETY SWITCHES SHALL BE TOTALLY ENCLOSED, HEAVY DUTY TYPE. SWITCHES SHALL HAVE VOLTAGE, HORSEPOWER AND AMPERE RATING SUITABLE FOR THE APPLICATION. PROVIDE NUMBER OF POLES AS REQUIRED. SWITCHES LOCATED EXTERIOR TO THE BUILDING OR IN DAMP/WET LOCATIONS SHALL BE IN A NEMA 3R ENCLOSURE.
33. FUSES SHALL BE DUAL ELEMENT, TIME DELAY TYPE, AS MANUFACURED BY BUSSMAN, RELIANCE OR APPROVED EQUAL.
34. FEEDER TAPS WILL NOT BE ALLOWED IN PANELBOARD GUTTERS.
35. CONTRACTOR SHALL CHECK EXISTING CONDITIONS TO DETERMINE EXACT EXTENT OF WORK TO BE PERFORMED PRIOR TO BIDDING. DIMENSIONS RELEVANT TO EXISTING WORK SHALL BE VERIFIED IN THE FIELD.
36. ELECTRICAL SHUTDOWN SHALL BE AT A TIME AND DATE APPROVED BY THE OWNER.
37. PROVIDE AS-BUILT "CADD" DRAWINGS AT THE COMPLETION OF THE PROJECT.
38. ELECTRICAL CONTRACTOR SHALL LABEL ALL ELECTRICAL DEVICES INCLUDING BUT NOT LIMITED TO RECEPTACLES, TEL/DATA OUTLETS, DISCONNECT SWITCHES, PANELBOARDS, THERMAL MOTOR SWITCHES, CONTROL PANELS, JUNCTION BOXES, ETC.
    d. RECEPTACLES - PANEL NAME AND CIRCUIT DESIGNATION
    e. DISCONNECTS - PANEL NAME, CIRCUIT DESIGNATION AND EQUIPMENT SERVING.
    f. ENCLOSED CIRCUIT BREAKERS - PANEL NAME, CIRCUIT DESIGNATION AND EQUIPMENT SERVING.
    g. PANELBOARDS - PANEL NAME, VOLTAGE, AMPERAGE, PHASE AS WELL AS PANEL AND CIRCUIT IT IS FED FROM.
    h. CONTROL PANEL - PANEL NAME AND CIRCUIT DESIGNATION
    i. JUNCTION BOXES - PANEL NAME AND CIRCUIT DESIGNATION
39. ADDRESS QUESTIONS TO THE ENGINEER IN WRITING BEFORE AWARD OF CONTRACT, OTHERWISE ENGINEER INTERPERTATION OF MEANING AND INTENT OF DRAWINGS SHALL BE FINAL.

Project:

TOWN OF BROOKLINE, MA

CYPRESS STREET PLAYGROUND

Weston & Sampson

85 Devonshire Street,
3rd Floor, Boston, MA 02109
617.412.4480 800.SAMPSON
www.westonandsampson.com

Consultants:

Revisions:

No.	Date	Description

Seal:

COMMONWEALTH OF MASSACHUSETTS
ROBERT E. McALEER
ELECTRICAL
No. 48017
REGISTERED PROFESSIONAL ENGINEER

Issued For:

BIDDING DOCUMENTS

Scale:	AS SHOWN
Date:	MAY 26, 2020
Drawn By:	LR, EB, HC
Reviewed By:	BMK
Approved By:	ERB
W&S Project No:	2190095
W&S File No:	

Drawing Title:

ELECTRICAL LEGEND, ABBREVIATIONS, AND GENERAL NOTES

Sheet Number:

E0.01

COPYRIGHT 2020 WESTON & SAMPSON

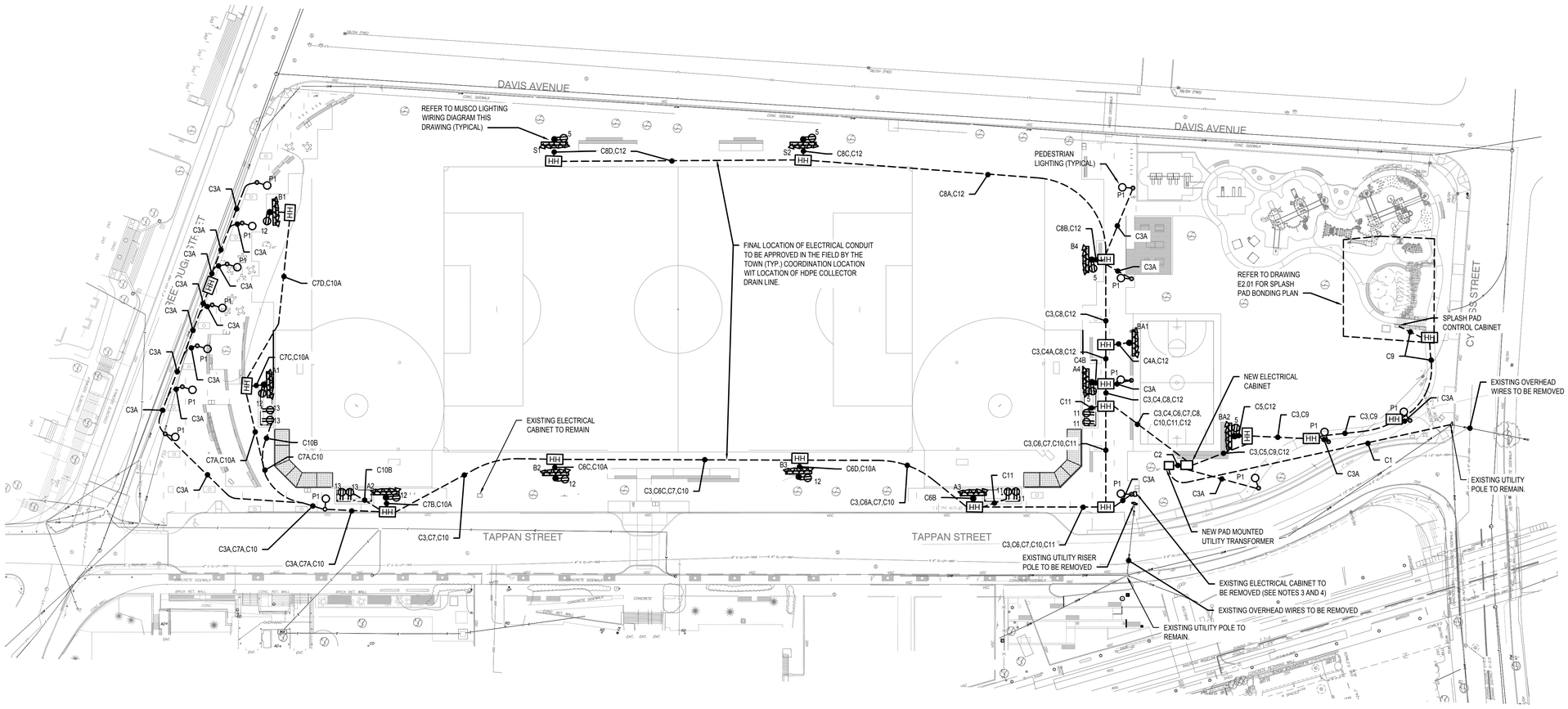

ELECTRICAL SITE PLAN

SCALE: 1" = 40'-0"

40 20 0 40 80

SCALE: 1"=40'

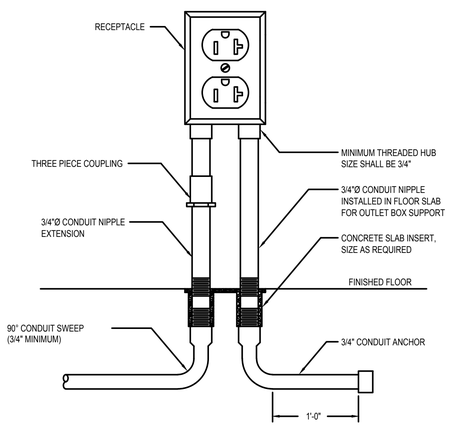

NOTES:

1. DUPLEX RECEPTACLE INDICATED, SINGLE DEVICE, HEAVY DUTY RECEPTACLE OR JUNCTION BOX REQUIRED.
2. DUPLEX RECEPTACLE INDICATED, SINGLE DEVICE, HEAVY DUTY RECEPTACLE OR

PEDESTAL RECEPTACLE DETAIL

NOT TO SCALE

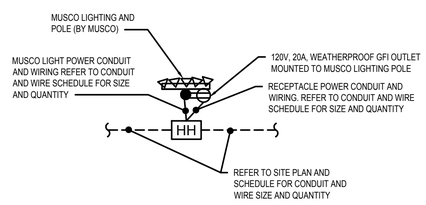

MUSCO LIGHTING WIRING DIAGRAM

NOT TO SCALE

DRAWING NOTES:

1. REFER TO DRAWING E0.01 FOR LEGEND, ABBREVIATIONS AND GENERAL NOTES.
2. REFER TO DRAWING E6.01 FOR CONDUIT AND WIRE SCHEDULES.
3. CONTRACTOR SHALL DISCONNECT AND REMOVE EXISTING ELECTRICAL CABINET AND ALL ASSOCIATED CONDUIT AND WIRE. COORDINATE THE REMOVAL OF THE EXISTING ELECTRICAL SERVICE WITH THE UTILITY COMPANY.
4. CONTRACTOR SHALL DISCONNECT EXISTING IRRIGATION SYSTEM POWER AND RE-POWER CONTROLLER WITHIN NEW CABINET FROM NEW ELECTRICAL SERVICE. COORDINATE EXACT POWER REQUIREMENTS IN THE FIELD WITH THE EXISTING IRRIGATION CONTROLLER AND GENERAL CONTRACTOR.

Project:

TOWN OF BROOKLINE, MA

CYPRESS STREET PLAYGROUND

Weston & Sampson

85 Devonshire Street,
3rd Floor, Boston, MA 02109
617.412.4480 800.SAMPSON
www.westonandsampson.com

Consultants:

Revisions:

No.	Date	Description

Seal:

COMMONWEALTH OF MASSACHUSETTS ROBERT F. McALEER ELECTRICAL No. 48017 REGISTERED PROFESSIONAL ENGINEER

Issued For:

BIDDING DOCUMENTS

Scale:	AS SHOWN
Date:	MAY 26, 2020
Drawn By:	LR, EB, HC
Reviewed By:	BMK
Approved By:	ERB
W&S Project No:	2190095
W&S File No:	

Drawing Title:

ELECTRICAL SITE PLAN

Sheet Number:

E0.02

COPYRIGHT 2020 WESTON & SAMPSON

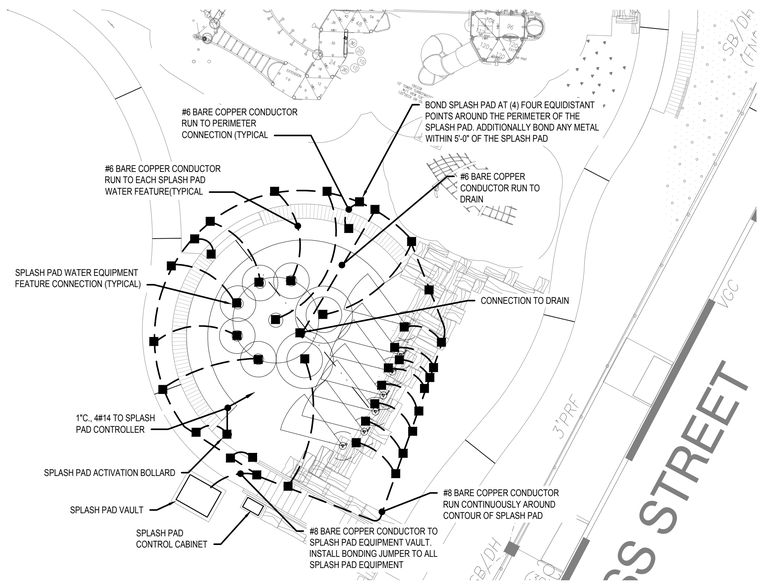

SPLASH PAD BONDING PLAN

SCALE: 1" = 10'-0"

10 5 0 10 20

SCALE: 1"=10'

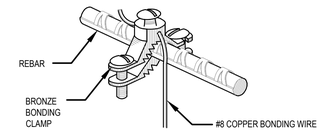

BONDING DETAIL

NOT TO SCALE

EQUIPOTENTIAL BONDING GRID

REFER TO NEC ARTICLE 680.26

EQUIPOTENTIAL BONDING GRID TO RUN CONTINUOSULY AROUND THE CONTOUR OF THE SPLASH PAD EXTENDING 18" TO 24" FROM THE OUTSIDE WALLS OF THE SPLASH PAD. THE 4"-6" BELOW GRADE GRID PATTERN SHALL BE SECURED WITHIN OR UNDER THE SPLASH PAD DECK MEDIA. THE GRID SHALL BE CONSTRUCTED OF MINIMUM #8 AWG BARE SOLID COPPER CONDUCTORS.

EQUIPOTENTIAL BONDING CONDUCTOR SHALL COMPLY WITH NEC 2017 ARTICLE 680.26.

SPLASH PAD BONDING NOTES :

1. ALL METALLIC PARTS OF THE SPLASH PAD STRUCTURES, INCLUDING THE REINFORCING METAL OF THE PAD, FOUNTAINS AND ALL OTHER METALLIC COMPONENTS AS REQUIRED BY CODE SHALL BE BONDED PER THE REQUIREMENTS OF THE CURRENT ELECTRICAL CODE.
2. SOLID COPPER BONDING CONDUCTORS SHALL NOT BE SMALLER THAN NO. 8 AWG AND SHALL BE LARGER WHERE INDICATED.
3. FURNISH AND INSTALL ANY REQUIRED GROUNDING RODS.
4. PROVIDE AND INSTALL BONDING CONDUCTORS THROUGHOUT THE BONDING SYSTEM WITH CONNECTION TO EACH ITEM OF THE SPLASH PAD.
5. BONDING CONDUCTORS SHALL BE CONTINUOUS.
6. INSULATE ANY SPLICES WITH APPROVED INSULATION KIT AND MAKE WATER TIGHT TO PROTECT FROM CORROSION AND MAINTAIN THE INTEGRITY OF THE SPLICE.
7. PROVIDE RED MARKING TAPE BURIED 6" TO 10" BELOW SURFACE INDICATING ANY BURIED BOND WIRES BELOW THAT EXTEND BEYOND THE PERIMETER OF THE SPLASH PAD.
8. COORDINATE INSTALLATION OF GROUNDING/BONDING AT THE BEGINNING OF THE PROJECT. ELECTRICIAN MUST BE PRESENT TO PERFORM HIS WORK BEFORE THE CONCRETE IS APPLIED.
9. COORDINATE FOR CONNECTION OF ALL POOL REBAR, REINFORCING STEEL, AND EQUIPMENT BONDS BEFORE CONCRETE IS POURED.

Project:

TOWN OF BROOKLINE, MA

CYPRESS STREET PLAYGROUND

Weston & Sampson

85 Devonshire Street,
3rd Floor, Boston, MA 02109
617.412.4480 800.SAMPSON
www.westonandsampson.com

Consultants:

Revisions:

No.	Date	Description

Seal:

COMMONWEALTH OF MASSACHUSETTS
ROBERT F. McALEER
ELECTRICAL
No. 48017
REGISTERED PROFESSIONAL ENGINEER

Issued For:

BIDDING DOCUMENTS

Scale:	AS SHOWN
Date:	MAY 26, 2020
Drawn By:	LR, EB, HC
Reviewed By:	BMK
Approved By:	ERB
W&S Project No:	2190095
W&S File No:	

Drawing Title:

ELECTRICAL SPLASH PAD BONDING PLAN

Sheet Number:

E2.01

COPYRIGHT 2020 WESTON & SAMPSON

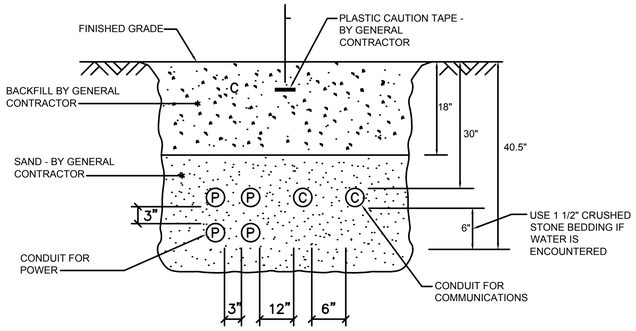

TYPICAL DIRECT BURIED CONDUIT DETAIL

NOT TO SCALE

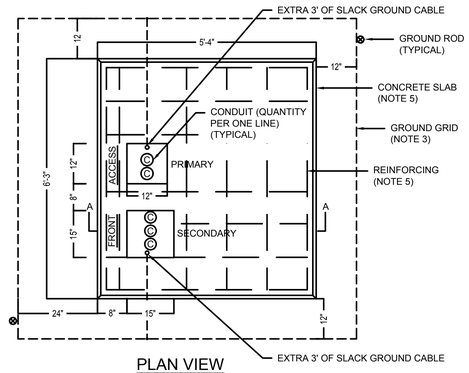

PLAN VIEW

NOT TO SCALE

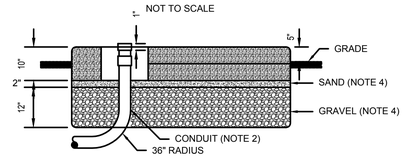

SECTION A-A

NOT TO SCALE

PADMOUNT - FOUNDATION

1. SCOPE - THIS STANDARD COVERS SPECIFICATIONS FOR THE CONSTRUCTION OF PADMOUNT TRANSFORMER FOUNDATIONS AND GROUNDING.
2. CONDUIT BY ELECTRICAL CONTRACTOR - INSTALL AS SHOWN BEFORE SLAB IS POURED. USE 36" RADIUS BENDS, WITH COUPLINGS, NIPPLES AND BUSHINGS AS REQUIRED. (MATERIAL MAY BE GALVANIZED STEEL, BLACK IRON, OR TYPE II FIBER OR PLASTIC.) TERMINATIONS OF CONDUITS SHALL BE LOCATED EXACTLY AS SHOWN, SOLID OR DOTTED, DEPENDING UPON NUMBER OF DUCTS. THE NIPPLE AND BUSHING SHOULD BE INSTALLED AFTER THE TRANSFORMER IS PLACED AND BEFORE THE CABLES ARE PULLED.
3. GROUND GRID BY ELECTRICAL CONTRACTOR -INSTALL #1/0 S.D. 7 STRAND BARE COPPER WIRE LOOP 1'-0" BELOW GRADE. BOND TO ALL EXPOSED METALLIC CONDUIT AND LEAVE 3'-0" OF WIRE ABOVE PAD FOR GROUNDING TRANSFORMER AT TWO OPPOSITE POINTS IN THE CABLE CONDUIT OPENINGS. 3.A. PHOS-COPPER BRAZE CONNECTIONS, CADWELD, OR USE TWO APPROVED CONNECTORS PER JOINT. INSTALL TWO 8 FT. GALVANIZED STEEL (3/4") GROUND RODS WHERE SHOWN. LEAVE GRID EXPOSED UNTIL INSPECTED BY THE UTILITY COMPANY.
4. GRAVEL & SAND BY GENERAL CONTRACTOR -SHALL BE PLACED AS SHOWN IN FIGS. 1 AND 2; THE GRAVEL BEING COMPACTED AND THE SAND THOROUGHLY WETTED JUST BEFORE PLACING THE CONCRETE.
5. CONCRETE SLAB BY GENERAL CONTRACTOR -INSTALL 2000 LB. CONCRETE IN ACCORDANCE WITH UTILITY COMPANY REQUIREMENTS. REINFORCE WITH 1/2" RODS LOCATED AS SHOWN AND IN THE MIDDLE OF THE SLAB.
6. THE ELECTRICAL CONTRACTOR SHALL COORDINATE WITH THE UTILITY COMPANY FOR ALL INSTALLATION REQUIREMENTS PRIOR TO THE START OF ANY WORK.

PAD MOUNTED TRANSFORMER DETAIL

NOT TO SCALE

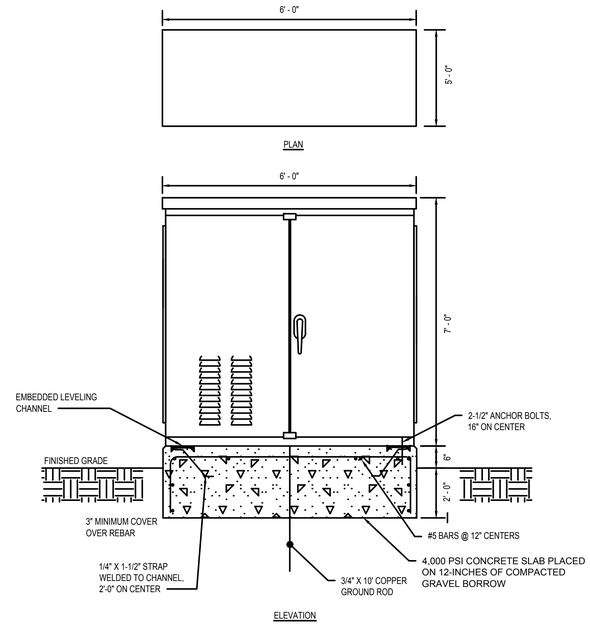

NOTES:

1. DIMENSIONS SHOWN ARE FOR PRICING PURPOSES ONLY. CONTRACTOR SHALL COORDINATE THE EXACT CABINET SIZE WITH ALL MANUFACTURER EQUIPMENT SIZES PRIOR TO SUBMITTING THE CABINET FOR APPROVAL. PROVIDE A SCALED DRAWING SHOWING ALL EQUIPMENT WITH SHOP DRAWING FOR APPROVAL.
2. CABINET SHALL BE NEMA 3R, UL LISTED, 0.125 5052-H32 ALUMINUM.
3. CABINET SHALL BE PROVIDED WITH RECESSED MAIN DOOR WITH NEOPRENE GASKET. MAIN DOOR TO HAVE STANILESS STEEL CONTINOUS HINGE, CARRIAGE BOLTED WITH NYLON LOCKNUTS.
4. PROVIDE WIND RESTRAINT MECHANISM AT DOOR BOTTOM.
5. PROVIDE 3-POINT DRAW ROLLER LATCH MECHANISM WITH 5/8" HEX HANDLE.
6. CABINET SHALL HAVE A POWDER COATED HIGH GLOSS BLACK FINISH.
7. COORDINATE FINAL CABIENT WITH BROOKLINE PUBLIC WORKS STREET LIGHTING STANDARDS.

PAD MOUNTED ELECTRICAL CABINET DETAIL

NOT TO SCALE

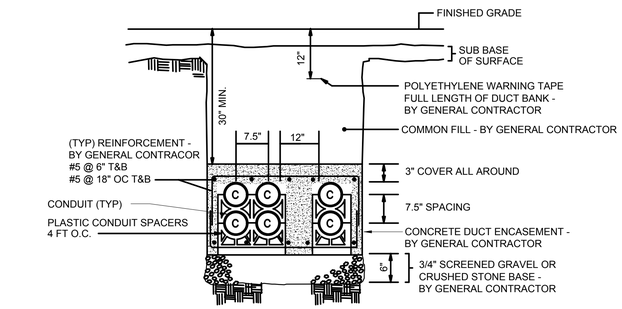

TYPICAL CONCRETE ENCASED DUCTBANK DETAIL

NOT TO SCALE

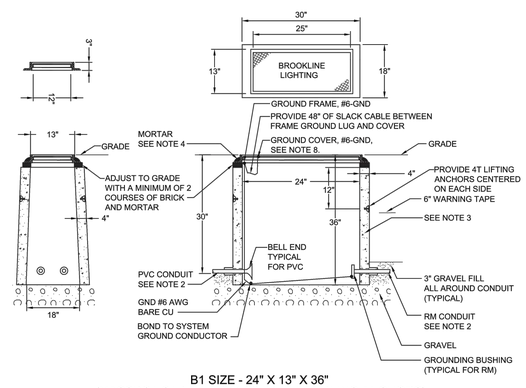

B1 SIZE - 24" X 13" X 36"
(MASSDOT STD ITEM 811.22 WITH HANDLING ANCHORS)

HANDHOLE NOTES:

1. FOR THE EXACT NUMBER, SIZE, AND ORIENTATION OF THE CONDUITS ENTERING THE HANDHOLE, SEE PLAN SHEETS.
2. ALL CONDUIT ENTERING HANDHOLES SHALL EXTEND INTO THE HANDHOLE CAVITY BY AT LEAST 2".
3. ALL ROADWAY HANDHOLES SHALL BE PRECAST CONCRETE REINFORCED WITH STEEL, AND SHALL BE FREE OF CRACKS OR OTHER DEFECTS.
4. CAST IRON FRAME SHALL BE MORTARED TO THE SURFACE OF THE PRECAST HANDHOLE.
5. ALL CONDUIT INSTALLED IN HAND HOLES SHALL BE INSTALLED IN KNOCKOUTS PROVIDED IN THE BOX. AND NO EXCESS KNOCKOUTS SHALL BE MADE. THE KNOCKOUTS ARE DESIGNED TO BE MADE PRIOR TO BACKFILLING AROUND THE HAND HOLES. AFTER THE CONDUIT HAS BEEN INSTALLED IN THE HAND HOLE, THE OPEN SPACE BETWEEN THE BOX AND THE CONDUIT WILL BE SEALED WITH CLASS B CEMENT CONCRETE MASONRY. ANY CONDUIT INSTALLED IN SUCH A MANNER AS TO BLOCK COMPLETE ACCESS TO ANY OTHER CONDUIT SHALL BE REMOVED AND RESET.
6. CAST IRON HANDHOLE COVERS AND FRAMES SHALL BE PRODUCED BY THE SAME MANUFACTURER AND IN ACCORDANCE WITH MASSACHUSETTS HIGHWAY DEPARTMENT SPECIFICATIONS. ALL FRAME AND COVERS TO BE RATED AASHTO H-20.
7. FUNCTION DESIGNATION ON THE HANDHOLE SHALL BE LABELED "BROOKLINE LIGHTING" PER NEC ARTICLE 314.30D.
8. FOR GROUNDING OF HANDHOLE COVER, EXOTHERMIC WELD GROUND CONDUCTOR TO COVER OR DRILL AND TAP FOR GROUND LUG CONNECTION. CONTRACTOR SHALL COORDINATE WITH HANDHOLE COVER MANUFACTURE BEFORE DRILLING TO AVOID COMPROMISING LOAD RATING OF COVER.

STREETLIGHTING ELECTRIC HANDHOLE DETAIL

NOT TO SCALE

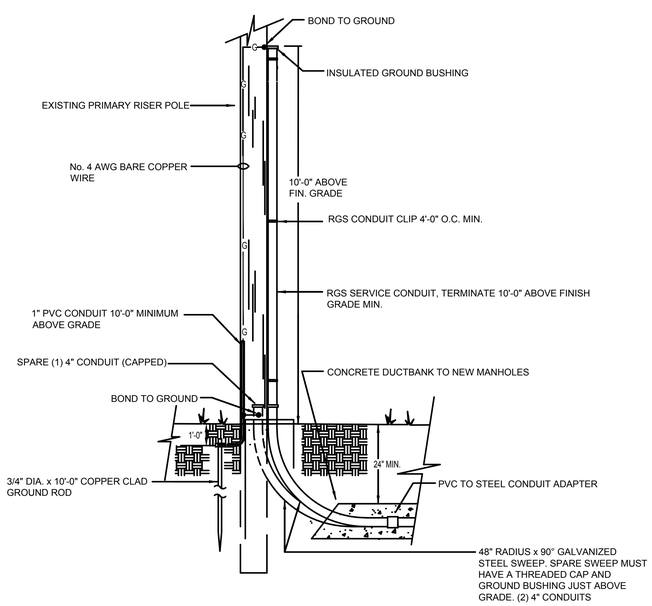

TYPICAL UTILITY RISER POLE DETAIL

NOT TO SCALE

Project:

TOWN OF BROOKLINE, MA

CYPRESS STREET PLAYGROUND

Weston & Sampson

85 Devonshire Street,
3rd Floor, Boston, MA 02109
617.412.4480 800.SAMPSON
www.westonandsampson.com

Consultants:

Revisions:

No.	Date	Description

Seal:

COMMONWEALTH OF MASSACHUSETTS ROBERT F. McALEER ELECTRICAL No. 48017 REGISTERED PROFESSIONAL ENGINEER

Issued For:

BIDDING DOCUMENTS

Scale:	AS SHOWN
Date:	MAY 26, 2020
Drawn By:	LR, EB, HC
Reviewed By:	BMK
Approved By:	ERB
W&S Project No:	2190095
W&S File No:	

Drawing Title:

ELECTRICAL DETAILS

Sheet Number:

E5.01

COPYRIGHT 2020 WESTON & SAMPSON

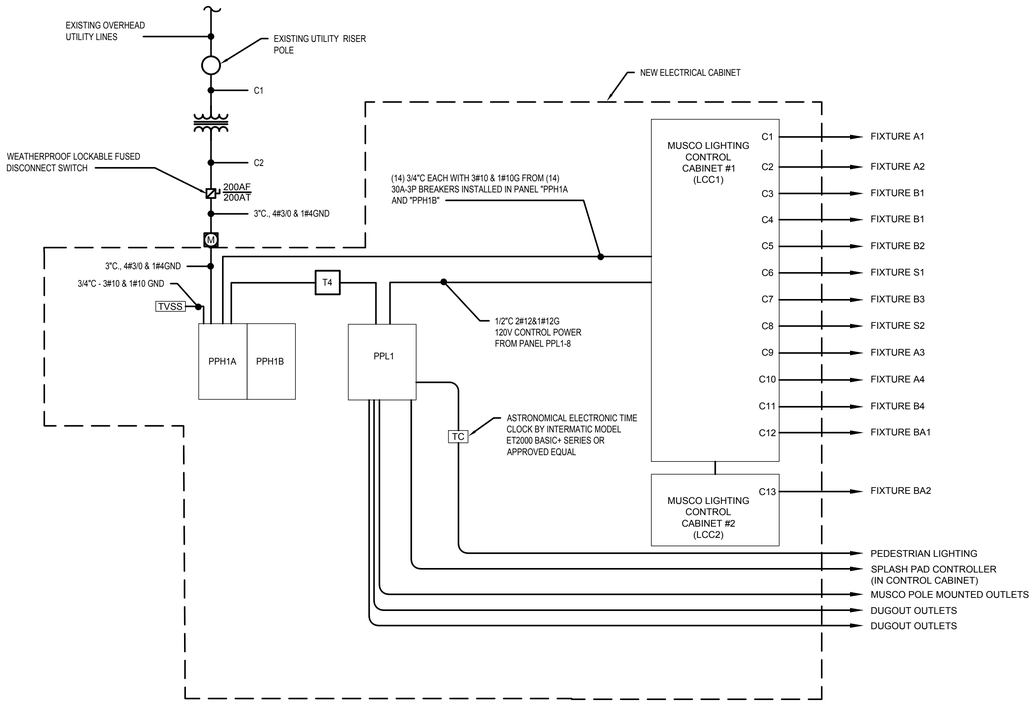

DRAWING NOTES:

1. REFER TO DRAWING E0.01 FOR LEGEND, ABBREVIATIONS AND GENERAL NOTES.

ONE LINE DIAGRAM NOTES:

1. TYPICAL FOR ALL CONTACTORS, CONTRACTOR SHALL RUN CONDUIT AND WIRING AS INDICATED IN SCHEDULE FROM EACH CONTACTOR TO DESIGNATED LIGHTING POLE. CONTRACTOR SHALL RUN CONDUIT TO 10'-0" AFG FOR CONNECTION TO POLE MOUNTED LIGHTING CONNECTION BOX.

ONE LINE DIAGRAM

NOT TO SCALE

DRY TYPE TRANSFORMER SCHEDULE 480,3-PHASE-120/240V, 1-PHASE

SIZE	KVA	PRIMARY AMPS	SECONDARY AMPS	480 VOLT OVERCURRENT	208 VOLT OVERCURRENT	480V FEEDER CODE	120/208V FEEDER CODE	GROUND SIZE
T4	45	54	187.5	70A, 3P	225A, 2P	3#1/0 & 1#6G - 1 1/2"C.	3#4/0 & 1#4G - 3"C.	#4-1"C

CONDUIT AND WIRE SCHEDULE

CONDUIT TAG	FEEDER	FROM	TO	CONTACT	NO. OF FIXTURES	NO. OF OUTLETS	LOAD	CONTACT SIZE	REMARKS
C1	(1) 4"C., PRIMARY (1) 4"C., SPARE	UTILITY POLE	UTILITY TRANSFORMER	-	-	-	-	-	C0NCRETE ENCASED
C2	(1) 3"C., 4-250KCMIL & 1#4GND (1) 3"C. SPARE	UTILITY TRANSFORMER	ELECTRICAL CABINET	-	-	-	-	-	C0NCRETE ENCASED
C3	3"C., 2#12 & 1#12GND	PANEL PPL1 CKT#14,16	PEDESTRIAN LIGHTING	-	14	-	784W	-	DIRECT BURIED
C3A	2"C., 3#12 & 1#12GND	MUSCO LIGHTING CONTROL CABINET LCC1	PEDESTRIAN LIGHTING	-	1	-	56W	-	DIRECT BURIED
C4	2"C., 2 SETS OF (3#8 & 1#10GND)	MUSCO LIGHTING CONTROL CABINET LCC1	FIXTURE BA1 FIXTURE A1	C12 C10	3 2	-	1.7A 5.3A	30A 30A	DIRECT BURIED
C4A	2"C., 3#8 & 1#10GND	MUSCO LIGHTING CONTROL CABINET LCC1	FIXTURE BA1	C12	2	-	1.7A	30A	DIRECT BURIED
C4B	2"C., 3#8 & 1#10GND	MUSCO LIGHTING CONTROL CABINET LCC1	FIXTURE A4	C10	2	-	5.3A	30A	DIRECT BURIED
C5	2"C., 3#10 & 1#10GND	MUSCO LIGHTING CONTROL CABINET LCC2	FIXTURE BA2	C13	2	-	1.7A	30A	DIRECT BURIED
C6	2"C., 3 SETS OF (3#8 & 1#10GND	MUSCO LIGHTING CONTROL CABINET LCC1	FIXTURE A3 FIXTURE B2 FIXTURE B3	C9 C5 C7	3 8 8	-	5.3A 14.1A 15.4A	30A 30A 30A	DIRECT BURIED
C6A	2"C., 2 SETS OF (3#8 & 1#10GND	MUSCO LIGHTING CONTROL CABINET LCC1	FIXTURE B2 FIXTURE B3	C5 E7	8 8	-	14.1A 15.4A	30A 30A	DIRECT BURIED
C6B	2"C., 3#8 & 1#10GND	MUSCO LIGHTING CONTROL CABINET LCC1	FIXTURE A3	C9	3	-	5.3A	30A	DIRECT BURIED
C6C	2"C., 3#8 & 1#10GND	MUSCO LIGHTING CONTROL CABINET LCC1	FIXTURE B2	C5	8	-	14.1A	30A	DIRECT BURIED
C6D	2"C., 3#8 & 1#10GND	MUSCO LIGHTING CONTROL CABINET LCC1	FIXTURE B3	C7	8	-	15.4A	30A	DIRECT BURIED
C7	2"C., 3 SETS OF (3#8 & 1#10GND	MUSCO LIGHTING CONTROL CABINET LCC1	FIXTURE A2 FIXTURE A1 FIXTURE B1	C2 C1 C3	3 3 5	-	5.8A 5.8A 8.9A	30A 30A 30A	DIRECT BURIED
C7A	2"C., 2 SETS OF (3#8 & 1#10GND	MUSCO LIGHTING CONTROL CABINET LCC1	FIXTURE A1 FIXTURE B1	C1 C3	3 5	-	5.8A 8.9A	30A 30A	DIRECT BURIED
C7B	1"C., 3#8 & 1#10GND	MUSCO LIGHTING CONTROL CABINET LCC1	FIXTURE A2	C2	3	-	5.8A	30A	DIRECT BURIED
C7C	1"C., 3#8 & 1#10GND	MUSCO LIGHTING CONTROL CABINET LCC1	FIXTURE A1	C1	3	-	5.8A	30A	DIRECT BURIED
C7D	1"C., 3#8 & 1#10GND	MUSCO LIGHTING CONTROL CABINET LCC1	FIXTURE B1	C3	5	-	8.9A	30A	DIRECT BURIED
C8	2"C., 3 SETS OF (3#8 & 1#10GND	MUSCO LIGHTING CONTROL CABINET LCC1	FIXTURE B4 FIXTURE S2 FIXTURE S1	C11 C8 C6	6 8 8	-	10.9A 17.3A 17.3A	30A 30A 30A	DIRECT BURIED
C8A	2"C., 2 SETS OF (3#8 & 1#10GND	MUSCO LIGHTING CONTROL CABINET LCC1	FIXTURE S2 FIXTURE S1	C8 C6	8 8	-	17.3A 17.3A	30A 30A	DIRECT BURIED
C8B	1"C., 3#8 & 1#10GND	MUSCO LIGHTING CONTROL CABINET LCC1	FIXTURE B4	C11	6	-	10.9A	30A	DIRECT BURIED
C8C	1"C., 3#8 & 1#10GND	MUSCO LIGHTING CONTROL CABINET LCC1	FIXTURE S2	C8	8	-	17.3A	30A	DIRECT BURIED
C8D	1"C., 2#12 & 1#12GND	MUSCO LIGHTING CONTROL CABINET LCC1	FIXTURE S1	D6	8	-	17.3A	30A	DIRECT BURIED
C9	1"C., 2#8 & 1#10GND	PANEL PPL1 CKT#4	SPLASH PAD CONTROLLER	-	-	-	-	-	DIRECT BURIED
C10	1"C., 2 SETS (2#10 & 1#12GND)	PANEL PPL1	MUSCO & DUGOUT OUTLETS	-	-	5 4	7.5A 6A	-	DIRECT BURIED
C10A	1"C., 2#10 & 1 #12GND	PANEL PPL1 CKT#12	MUSCO POLE OUTLETS	-	-	5	7.5A	-	DIRECT BURIED
C10B	1"C., 2#10 & 1 #12GND	PANEL PPL1 CKT#13	DUGOUT OUTLETS	-	-	4	6A	-	DIRECT BURIED
C11	1"C., 2#12 & 1#12GND	PANEL PPL1 CKT#11	DUGOUT OUTLETS	-	-	4	6A	-	DIRECT BURIED
C12	1"C., 2#12 & 1#12GND	PANEL PPL1 CKT#5	MUSCO POLE OUTLETS	-	-	5	7.5A	-	DIRECT BURIED

PANELBOARD SCHEDULE

DESIGNATION: PPH1A
S.C. RATING: 42,000 A RMS SYSTEM
REMARKS: SERVICE ENTRANCE RATED
LOCATION: ELECTRICAL CABINET
SERVICE: 480/277V,3Ø,4W
RATING: 250 AMPS
MOUNTING: SURFACE
MAIN: 250 AMP MCB

CKT. NO.	LOAD DESIGNATION	BREAKER TRIP	BREAKER POLE	PHASE A	PHASE B	PHASE C	BREAKER POLE	BREAKER TRIP	LOAD DESIGNATION	CKT. NO.
1	-	-						-	-	2
3	PANEL PPL1 VIA TRANSFORMER T4	70						30	SPORTS LIGHTING FIXTURE A1	4
5	-	-						-	-	6
7	-	-						-	-	8
9	SPORTS LIGHTING FIXTURE A2	30						30	SPORTS LIGHTING FIXTURE B1	10
11	-	-						-	-	12
13	-	-						-	-	14
15	SPORTS LIGHTING FIXTURE B1	30						30	SPORTS LIGHTING FIXTURE B2	16
17	-	-						-	-	18
19	-	-						-	-	20
21	SPORTS LIGHTING FIXTURE S1	30						30	SPORTS LIGHTING FIXTURE B3	22
23	-	-						-	-	24
25	-	-						-	-	26
27	SPORTS LIGHTING FIXTURE S2	30						30	SPORTS LIGHTING FIXTURE A3	28
29	-	-						-	-	30
31	-	-						-	-	32
33	SPORTS LIGHTING FIXTURE A4	30						30	SPARE	34
35	-	-						-	-	36
37	SPARE	20						20	SPARE	38
39	SPARE	20						20	SPARE	40
41	SPARE	20						20	SPARE	42

PANELBOARD SCHEDULE

DESIGNATION: PPH1B
S.C. RATING: 42,000 A RMS SYSTEM
REMARKS:
LOCATION: ELECTRICAL CABINET
SERVICE: 480/277V,3Ø,4W
RATING: 250 AMPS
MOUNTING: SURFACE
MAIN: MLO

CKT. NO.	LOAD DESIGNATION	BREAKER TRIP	BREAKER POLE	PHASE A	PHASE B	PHASE C	BREAKER POLE	BREAKER TRIP	LOAD DESIGNATION	CKT. NO.
1	-	-						-	-	2
3	SPORTS LIGHTING FIXTURE B4	30						30	SPORTS LIGHTING FIXTURE BA1	4
5	-	-						-	-	6
7	-	-						-	-	8
9	SPARE	30						30	SPORTS LIGHTING FIXTURE BA2	10
11	-	-						-	-	12
13	SPARE	20							SPARE	14
15	SPARE	20						20	SPARE	16
17	SPARE	20							SPARE	18
19	SPARE	20							SPARE	20
21	SPARE	20							SPARE	22
23	SPARE	20							SPARE	24
25	SPARE	20							SPARE	26
27	SPARE	20							SPARE	28
29	SPARE	20							SPARE	30
31	SPARE	20							SPARE	32
33	SPARE	20							SPARE	34
35	SPARE	20							SPARE	36
37	SPARE	20							SPARE	38
39	SPARE	20							SPARE	40
41	SPARE	20							SPARE	42

PANELBOARD SCHEDULE

DESIGNATION: PPL1
S.C. RATING: 10,000 A RMS SYSTEM
REMARKS:
LOCATION: ELECTRICAL CABINET
SERVICE: 120/240V,1Ø,3W
RATING: 250 AMPS
MOUNTING: SURFACE
MAIN: 225 AMP MCB

CKT. NO.	LOAD DESIGNATION	BREAKER TRIP	BREAKER POLE	PHASE A	PHASE B	BREAKER POLE	BREAKER TRIP	LOAD DESIGNATION	CKT. NO.
1	CABINET LIGHT	20					20	CABINET HEATER	2
3	CABINET RECEPTACLE	20					20	SPLASH PAD CONTROLLER	4
5	MUSCO POLE MOUNTED OUTLETS	20					20	SPARE	6
7	SPARE	20					20	MUSCO CONTROL CABINET	8
9	SPARE	20					20	SPARE	10
11	DUGOUT OUTLETS	20					20	MUSCO POLE MOUNTED OUTLETS	12
13	DUGOUT OUTLETS	20					20	PEDESTRIAN LIGHTING	14
15	SPARE	20					-	-	16
17	SPARE	20					20	SPARE	18
19	SPARE	20					20	SPARE	20
21	SPARE	20					20	SPARE	22
23	SPARE	20					20	SPARE	24
25	SPARE	20					20	SPARE	26
27	SPACE	20					20	SPACE	28
29	SPACE	20					20	SPACE	30

Project:
TOWN OF BROOKLINE, MA

CYPRESS STREET PLAYGROUND

Weston & Sampson
85 Devonshire Street,
3rd Floor, Boston, MA 02109
617.412.4480 800.SAMPSON
www.westonandsampson.com

Consultants:

Revisions:

No.	Date	Description

Seal:

Issued For:
BIDDING DOCUMENTS

Scale: AS SHOWN
Date: MAY 26, 2020
Drawn By: LR, EB, HC
Reviewed By: BMK
Approved By: ERB
W&S Project No: 2190095
W&S File No:

Drawing Title:
ELECTRICAL DIAGRAMS

Sheet Number:
E6.01

COPYRIGHT 2020 WESTON & SAMPSON