LAGOON STRUCTURES

LARZ ANDERSON PARK

BROOKLINE, MASSACHUSETTS

PREPARED FOR:

PARKS & OPEN SPACE DIVISION
333 WASHINGTON STREET
BROOKLINE, MA 02445

PREPARED BY:

kmdg
KLOPFER MARTIN DESIGN GROUP
69 CANAL STREET | 2ND FLOOR
BOSTON, MA 02114
617.227.2560
info@klopfermartin.com

STRUCTURAL ENGINEER:
Structures North consulting Engineers, Inc.
PO Box 8560
Salem, MA 01979
(978) 745-6817

WATER FEATURE:
Aqueous Consultants, LLC
2 Dundee Park Drive, Suite 301B
Andover, MA 01810
(978) 470-1695

DRAWING LIST

Sheet No.	Sheet Title
L0.0	COVER SHEET
L0.1	LEGEND, SYMBOLS, AND ABBREVIATIONS
L0.2	GENERAL NOTES
L1.1	EROSION AND SEDIMENTATION CONTROL PLAN
L1.2	DEMOLITION PLAN
L1.3	SITE MATERIALS AND GRADING PLAN
L1.4	SITE LAYOUT PLAN
L2.1	SITE MATERIALS & GRADING PLAN - TEMPIETTO
L2.2	SITE MATERIALS & GRADING PLAN - CAUSEWAY
L2.3	SITE MATERIALS & GRADING PLAN - BRIDGE AND WEIR
L3.1	TEMPIETTO PLANS - 1
L3.2	TEMPIETTO PLANS - 2
L3.3	CAUSEWAY PLAN
L3.4	BRIDGE AND WEIR PLANS
L4.1	TEMPIETTO ELEVATIONS
L4.2	TEMPIETTO SECTIONS
L4.3	CAUSEWAY SECTIONS AND ELEVATIONS
L4.4	BRIDGE SECTIONS AND ELEVATIONS
L5.1	PAVING AND PLANTING DETAILS
L5.2	CAUSEWAY AND WEIR RAILING DETAILS
L5.3	BRIDGE RAILING DETAILS
L5.4	PRECAST CONCRETE & CAST STONE DETAILS
L5.5	CIP CONCRETE DETAILS - 1
L5.6	CIP CONCRETE DETAILS - 2
L5.7	CIP CONCRETE DETAILS - 3
S-1	TEMPIETTO - STRUCTURAL SECTIONS
S-2	TEMPIETTO - STRUCTURAL PLANS
S-3	TEMPIETTO - STRUCTURAL DETAILS
WF-1	MECHANICAL WATER FEATURE PLAN LAYOUT
WF-2	MECHANICAL WATER FEATURE DETAILS
WF-3	MECHANICAL WATER FEATURE DETAILS
WF-4	WELL WATER SYSTEM DETAILS

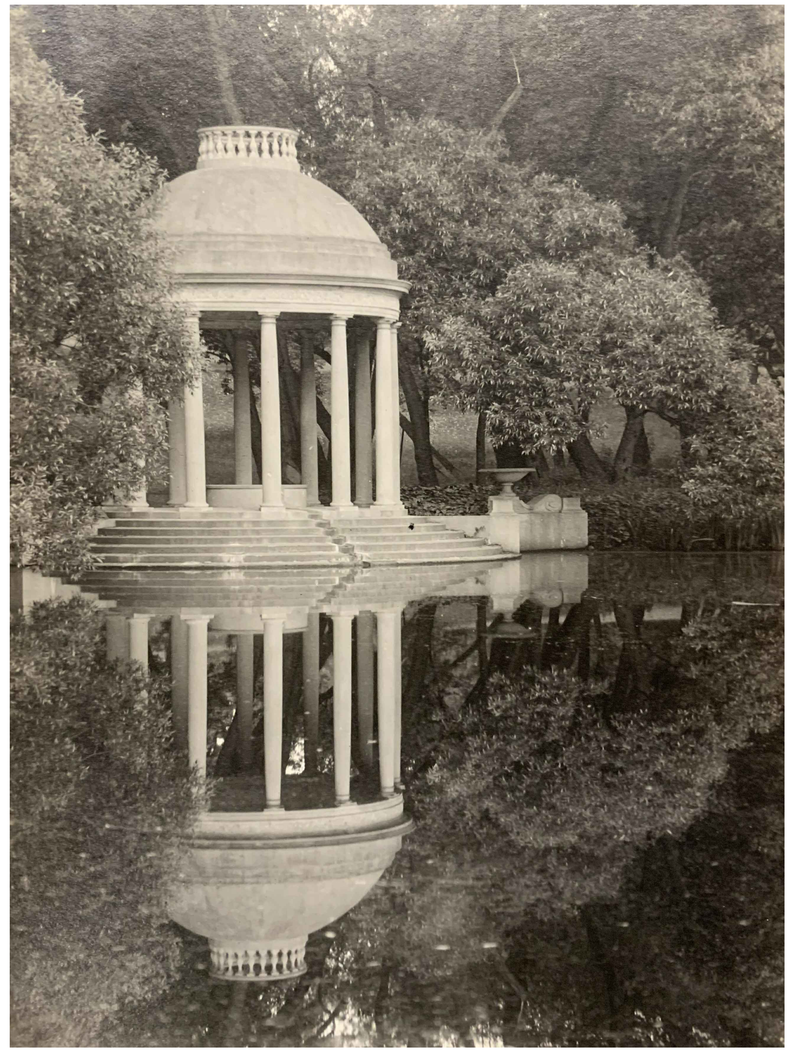

BID SET 07/06/2020

CALL "DIGSAFE" AT
LEAST 72 HOURS IN ADVANCE OF CONSTRUCTION AT
1-888-DIG-SAFE OR 1-888-344-7233

MATERIALS LEGEND

	CLEAN FILL
	CONCRETE
	GRAVEL
	SAND
	SUB GRADE
	PLANTING SOIL
	MULCH
	INSULATION - RIGID
	STRUCTURAL SOIL

GRAPHIC SYMBOLS

1 VIEW NAME SCALE: 1/4" = 1'-0"	DRAWING TITLE
1 L-2	EXTERIOR ELEVATION KEY
1 L-2	BUILDING SECTION MARKER
	VERTICAL ELEVATION KEY
	DETAIL AREA MARKER
1 L-2	DETAIL SECTION MARKER
#	COLUMN GRID LINE
MATCH LINE A0.0	MATCH LINE

1.5%	SLOPE MARKER	P	LANDSCAPE PAVING TAG
+XXX.XXHP	SPOT ELEVATION - PLAN	ST	LANDSCAPE STONE SURFACING TAG
+50	SPOT ELEVATION - SECTION	S	LANDSCAPE SOIL TAG
#	REVISION CLOUD AND REVISION TAG	FE	LANDSCAPE WALL/FENCE TAG
ALIGN	ALIGN SURFACES	F	LANDSCAPE FURNISHINGS TAG
℄	CENTERLINE		

ABBREVIATIONS LIST

AD	AREA DRAIN
ADJ	ADJACENT
AGG	AGGREGATE
BC	BOTTOM OF CURB
BETW	BETWEEN
BIT	BITUMINOUS
BS	BOTTOM OF STEP
BW	BOTTOM OF WALL
BWSC	BOSTON WATER & SEWER
CB	CATCH BASIN
CLF	CHAIN LINK FENCE
CIP	CAST IN PLACE
CJ	CONTROL JOINT
CONC	CONCRETE
CO	CLEAN OUT
CP	CENTER POINT
DET'L	DETAIL
DIA	DIAMETER
DIM	DIMENSION
DWG	DRAWING
EA	EACH
EHH	ELECTRIC HAND HOLE
EJ	EXPANSION JOINT
EQ	EQUAL
EX	EXISTING
EXP	EXPANSION
FFE	FINISH FLOOR ELEVATION
FIN	FINISH
FP	FLAG POLE
GA	GAUGE
GALV	GALVANIZED
GRAN	GRANITE
GSO	GAS SHUT OFF
HH	ELECTRIC HANDHOLE
HT	HEIGHT
HYD	HYDRANT
INACC	INACCESSIBLE
JT	JOINT
LA	LANDSCAPE ARCHITECT
LP	LIGHT POLE
MAT'L	MATERIAL
MAX	MAXIMUM
MH	MANHOLE
MIN	MINIMUM
NTS	NOT TO SCALE
NVC	NO VISIBLE CONNECTION
OC	ON CENTER
OD	OUTSIDE DIAMETER
PC	POINT OF CURVATURE
PCS	PIECES
PKG	PARKING
POB	POINT OF BEGINNING
PSF	POUNDS PER SQUARE FOOT
PSI	POUNDS PER SQUARE INCH
PT	POINT OF TANGENCY
PTD	PAINTED
PVMT	PAVEMENT
REC	RECORD
REINF	REINFORCED
REQ	REQUIRED
SBSS	SAND BASED STRUCTURAL SOIL
SF	SQUARE FEET
SHT	SHEET
SIM	SIMILAR
STA	STATION
STL	STEEL
STR	STRUCTURE
TC	TOP OF CURB
TH	THRESHOLD
TS	TOP OF STEP
TW	TOP OF WALL
TYP	TYPICAL
UNO	UNLESS NOTED OTHERWISE
VERT	VERTICAL
VGC	VERTICAL GRANITE CURB
VIF	VERIFY IN FIELD
WG	WATER GATE
WIF	WROUGHT IRON FENCE
WSO	WATER SHUT OFF
WWM	WELDED WIRE MESH

kmdg
KLOPFER MARTIN DESIGN GROUP

69 CANAL STREET | 2ND FLOOR
BOSTON, MA 02114
t: 617.227.2560
info@klopfermartin.com

CLIENT:

TOWN OF BROOKLINE
333 WASHINGTON STREET
BROOKLINE, MA 02445

REVISIONS:

REV DATE NOTE

PROJECT:

LARZ LAGOON STRUCTURES
PROJECT # 1811
BROOKLINE, MA 02445

DRAWING:

LEGEND, SYMBOLS, AND ABBREVIATIONS

BID SET

DRAWN: EB
REVIEW: KP

SCALE: N/A

DATE: JULY 6, 2020

SHEET:

L0.1

i - GENERAL NOTES

1. DO NOT SCALE DRAWINGS

2. VERIFY DIMENSIONS, GRADES, BOUNDARIES, AND CONSTRUCTION AND IMMEDIATELY REPORT ANY DISCREPANCIES TO THE OWNER'S REPRESENTATIVE BEFORE PROCEEDING WITH THE WORK.

3. TO THE EXTENT PRACTICABLE, VERIFY DIMENSIONS AND FIELD CONDITIONS AT THE SITE PRIOR TO THE BID SUBMISSION. CONFLICTS, OMISSIONS AND DISCREPANCIES WITHIN THE CONTRACT DOCUMENTS SHALL BE REPORTED IN WRITING TO THE OWNER'S REPRESENTATIVE, IN ACCORDANCE WITH THE CONTRACT DOCUMENTS, PRIOR TO THE BID SUBMISSION. THE CONTRACTOR WARRANTS, BY TENDERING HIS BID, THAT THE WORK IS BUILDABLE AS SHOWN.

4. LANDSCAPE ARCHITECT IS NOT RESPONSIBLE FOR CONSTRUCTION THAT IS STARTED PRIOR TO PERMIT BEING ISSUED.

5. DIMENSIONS, NOTES, FINISHES AND FIXTURES SHOWN ON TYPICAL PLANS, SECTION OR DETAILS SHALL APPLY TO SIMILAR, SYMMETRICAL OR OPPOSITE HAND PLANS SECTIONS OR DETAILS, UNLESS NOTED OTHERWISE.

6. TYPICAL OR "TYP" SHALL MEAN THAT THE CONDITION IS REPRESENTATIVE FOR SIMILAR CONDITIONS THROUGHOUT, UNLESS NOTED OTHERWISE. DETAILS ARE USUALLY KEYED AND NOTED "TYP" ONLY ONE TIME, WHEN THEY FIRST OCCUR.

7. IMMEDIATELY NOTIFY THE OWNER'S REPRESENTATIVE IN WRITING OF ANY DISCREPANCIES BETWEEN PROJECT MANUAL, LARGE SCALE DRAWINGS, SMALL SCALE DRAWINGS AND DETAILS. THE CONTRACTOR SHALL NOT PROCEED WITH AFFECTED WORK UNTIL OWNER'S REPRESENTATIVE PROVIDES CLARIFICATION

8. IF CONTRACT DRAWINGS AND SPECIFICATIONS ARE AT VARIANCE WITH ONE ANOTHER ON A PARTICULAR ITEM OR ITEMS, THE BID PROPOSAL SHALL BE BASED ON THE BETTER QUALITY OR MORE EXPENSIVE OF THE CONDITIONS INDICATED OR NOTED.

9. VERIFY THAT DRAWINGS ARE THE LATEST ISSUE PRIOR TO COMMENCING CONSTRUCTION. THE CONSTRUCTION MANAGER SHALL BE RESPONSIBLE FOR COMMUNICATING AND DISTRIBUTING ALL CONSTRUCTION DOCUMENT UPDATES TO ALL TRADES.

10. WORK SHALL CONFORM TO THE REQUIREMENTS OF APPLICABLE STATE, FEDERAL AND CITY/COUNTY CODES. STATE AND FEDERAL CODES ARE TO TAKE PRECEDENCE OVER THE DRAWINGS AND SPECIFICATIONS. IF ANY DISCREPANCY IS NOTED, IMMEDIATELY INFORM THE OWNER'S REPRESENTATIVE, PRIOR TO PROCEEDING WITH THE WORK.

11. FILE, OBTAIN AND PAY FEES FOR BUILDING DEPARTMENT PERMITS, CONTROLLED INSPECTIONS, OTHER AGENCY APPROVALS AND PERMITS WHERE REQUIRED, AND FINAL WRITE-OFF'S FOR PROJECT COMPLETION. COPIES OF TRANSACTIONS SHALL BE FORWARDED TO THE OWNER'S REPRESENTATIVE.

12. ALL WORK IS NEW, UNLESS NOTED OTHERWISE.

13. PATCH, REPAIR AND FINISH ALL SURFACES IN AREAS OUTSIDE OF THE EXISTING SCOPE THAT ARE DISTURBED AS A RESULT OF THE WORK.

14. APPLY, INSTALL, CONNECT, CLEAN AND/OR CONDITION MANUFACTURED ARTICLES, MATERIALS AND/OR EQUIPMENT PER MANUFACTURER'S INSTRUCTIONS. IN CASE OF CONFLICT BETWEEN MANUFACTURER'S INSTRUCTIONS AND THE CONTRACT DOCUMENTS, THE CONTRACTOR SHALL OBTAIN WRITTEN CLARIFICATION FROM THE OWNER'S REPRESENTATIVE BEFORE PROCEEDING.

15. PROVIDE 1/2" PREMOLDED ISOLATION JOINTS BETWEEN CONCRETE SLAB EDGES AND WALLS, UNLESS OTHERWISE NOTED.

ii - MATERIALS NOTES

1. THE CONTRACTOR SHALL VERIFY ALL CONDITIONS IN THE FIELD PRIOR TO INSTALLATION OF SITE IMPROVEMENTS AND SHALL REPORT ANY DISCREPANCIES THAT WILL AFFECT CONSTRUCTION TO THE OWNER'S REPRESENTATIVE.

2. THE CONTRACTOR SHALL BE RESPONSIBLE FOR COMPLETING WORK CALLED FOR ON THE DRAWINGS AND IN THE SPECIFICATIONS WHETHER OR NOT EACH WORK ELEMENT IS NOTED IN THE LEGEND.

3. STORAGE AREAS FOR CONTRACTOR'S EQUIPMENT AND MATERIALS SHALL BE ON AND WITHIN LIMITS OF WORK AS SHOWN ON THE PLANS AND AS APPROVED BY THE OWNER'S REPRESENTATIVE.

4. CONTRACTOR SHALL LOCATE AND VERIFY ALL EXISTING UTILITY LINES PRIOR TO ANY EXCAVATION AND SHALL REPORT ANY CONFLICTS TO THE OWNER'S REPRESENTATIVE.

5. ALL LANDSCAPED AREAS DISTURBED BY CONSTRUCTION OPERATIONS INSIDE AND OUTSIDE THE LIMIT OF WORK SHALL BE REPAIRED AS SPECIFIED AT NO EXTRA COST TO THE OWNER.

iii - LAYOUT NOTES

1. DO NOT SCALE DRAWINGS.

2. CONTRACTOR SHALL FIELD VERIFY ALL EXISTING CONDITIONS AND LAYOUT DIMENSIONS IN THE FIELD. REPORT ANY DISCREPANCIES IMMEDIATELY TO THE OWNER'S REPRESENTATIVE FOR DECISION PRIOR TO COMMENCING CONSTRUCTION.

3. ALL LINES AND DIMENSIONS ARE PARALLEL OR PERPENDICULAR TO THE LINES FROM WHICH THEY ARE MEASURED UNLESS OTHERWISE INDICATED.

4. ALL DIMENSIONS ARE GIVEN TO THE FRONT FACES OF WALLS AND STRUCTURES., BACK OF CURB, EDGE OF PAVING OR CENTERLINE UNLESS OTHERWISE STATED.

5. ALL ANGLES ARE ASSUMED TO BE 90 DEGREES UNLESS OTHERWISE STATED.

6. ALL ARROWS POINT DOWN, UNLESS NOTED OTHERWISE.

7. ANY CHANGES PROPOSED TO DIMENSIONS SHOWN ON THIS DRAWING SHALL BE APPROVED BY THE OWNER'S REPRESENTATIVE PRIOR TO CONSTRUCTION.

8. ALL PROPOSED LAYOUT, LINE, AND GRADE WORK PER DRAWINGS AND SPECIFICATIONS SHALL BE LAID OUT BY A REGISTERED CIVIL ENGINEER OR SURVEYOR OF THE COMMONWEALTH OF MASSACHUSETTS ENGAGED BY THE CONTRACTOR.

9. WHERE NEW PAVING OR EARTHWORK MEETS EXISTING PAVING OR EARTHWORK SMOOTHLY BLEND LINE AND GRADE OF EXISTING WITH NEW.

10. REFER TO OTHER CONSULTANTS' DRAWINGS FOR ADDITIONAL INFORMATION AND REQUIREMENTS.

11. FOR PATHS, STAKE ALIGNMENTS FOR OWNER REPRESENTATIVES' APPROVAL PRIOR TO INSTALLATION.

12. PRIOR TO INSTALLATION CONTRACTOR SHALL RECEIVE WRITTEN APPROVAL OF FINAL LOCATIONS OF ALL SITE FURNISHINGS FROM OWNER'S REPRESENTATIVE.

iv - GRADING NOTES

1. PRIOR TO COMMENCING ANY EXCAVATION WORK, THE CONTRACTOR SHALL NOTIFY ALL UTILITY COMPANIES IN ACCORDANCE WITH THE "DIG SAFE" NOTIFICATION PROCEDURES PROMOTED BY RESPECTIVE UTILITY COMPANIES. THE "DIG SAFE" TELEPHONE NUMBER FOR MASSACHUSETTS IS 1-888-344-7233.

2. THE CONTRACTOR IS RESPONSIBLE FOR CONSTRUCTING ALL IMPROVEMENTS IN FULL COMPLIANCE WITH THE AMERICANS WITH DISABILITIES ACT AND WITH THE MASSACHUSETTS ARCHITECTURAL ACCESS BOARD REQUIREMENTS.

3. CONTRACTOR SHALL VERIFY ALL EXISTING GRADES IN THE FIELD AND REPORT ANY DISCREPANCIES IMMEDIATELY TO THE OWNER'S REPRESENTATIVE.

4. GRADE SURFACES TO SLOPE AWAY FROM ALL BUILDINGS & STRUCTURES. ASSURE POSITIVE DRAINAGE AND PREVENT PONDING OF SURFACE DRAINAGE.

5. CONTRACTOR SHALL SUPPLY AND MAINTAIN FOR THE DURATION OF CONSTRUCTION ALL NECESSARY DEVICES FOR EROSION, SEDIMENT AND DUST CONTROL, SUCH AS HAY BALES, GRAVEL, BOARDS, DRAIN INLET SILT SACKS, ETC., INCLUDING THOSE DEVICES NECESSARY FOR STOCKPILES AND PROTECTION OF ADJACENT PUBLIC WAYS, AND SHALL REMOVE THE DEVICES AFTER PROJECT COMPLETION.

6. CONTRACTOR SHALL VERIFY ALL EXISTING TOP AND BOTTOM OF CURB AND TOP AND BOTTOM OF WALL ELEVATIONS BEFORE PROCEEDING WITH ANY CONSTRUCTION.

7. CONTRACTOR SHALL MAINTAIN FUNCTION OF EXISTING DRAINAGE SYSTEM DURING THE COURSE OF WORK.

8. CONTRACTOR SHALL MEET EXISTING GRADE AT LIMIT OF WORK LINE WITHOUT DISTURBING ABUTTING DRAINAGE CONDITIONS.

9. UNLESS INDICATED OTHERWISE, FINISHED GRADE IS CONSIDERED TO BE TOP OF LOAM.

10. ALL FILL MATERIAL IS SUBJECT TO APPROVAL BY LANDSCAPE ARCHITECT.

11. CONTRACTOR SHALL PITCH EVENLY BETWEEN SPOT GRADES. SET STRAIGHT LINE GRADES BETWEEN ELEVATIONS UNLESS OTHERWISE NOTED.

12. ALL PAVED AREAS MUST PITCH TO DRAIN AT A MINIMUM SLOPE OF ONE-EIGHTH INCH (1/8") PER FOOT. ANY DISCREPANCIES NOT ALLOWING THIS TO OCCUR SHALL BE REPORTED TO THE LANDSCAPE ARCHITECT PRIOR TO CONTINUING WORK.

13. CROSS SLOPES OF ALL PATHS AND SIDEWALKS SHALL NOT EXCEED 2%

14. ANY AREA OUTSIDE THE LIMIT OF WORK LINE THAT IS DISTURBED SHALL BE RESTORED TO ITS ORIGINAL CONDITION AT NO EXTRA COST TO THE OWNER.

15. NOTIFY OWNER'S REPRESENTATIVE FOR REVIEW OF FINISH GRADING PRIOR TO PLANTING.

16. THE CONTRACTOR IS RESPONSIBLE FOR CORRECTING ANY PAVED AREAS WHERE PUDDLING OCCURS AT THEIR EXPENSE IN A MANNER APPROVED BY THE OWNER'S REPRESENTATIVE.

17. CONTRACTOR SHALL MAKE TOP OF WALL PROFILES LEVEL UNLESS OTHERWISE NOTED.

18. ELEVATION AT BUILDING ENTRIES NOT TO BE LOWER THAN 1/4" FFE.

19. EXISTING CONDITIONS AND TOPOGRAPHIC DATA ARE FROM A SURVEY PREPARED BY DGT ASSOCIATES SURVEYING & ENGINEERING; 1071 WORCESTER RD., FRAMINGHAM MA 01701; 508-879-0030; WWW.DGTASSOCIATES.COM

kmdg
KLOPFER MARTIN DESIGN GROUP

69 CANAL STREET | 2ND FLOOR
BOSTON, MA 02114
t: 617.227.2560
info@klopfermartin.com

CLIENT:

TOWN OF BROOKLINE
333 WASHINGTON STREET
BROOKLINE, MA 02445

REVISIONS:

REV DATE NOTE

PROJECT:

LARZ LAGOON STRUCTURES
PROJECT # 1811
BROOKLINE, MA 02445

DRAWING:

GENERAL NOTES

BID SET

DRAWN: EB
REVIEW: KP

SCALE: N/A

DATE: JULY 6, 2020

SHEET:

L0.2

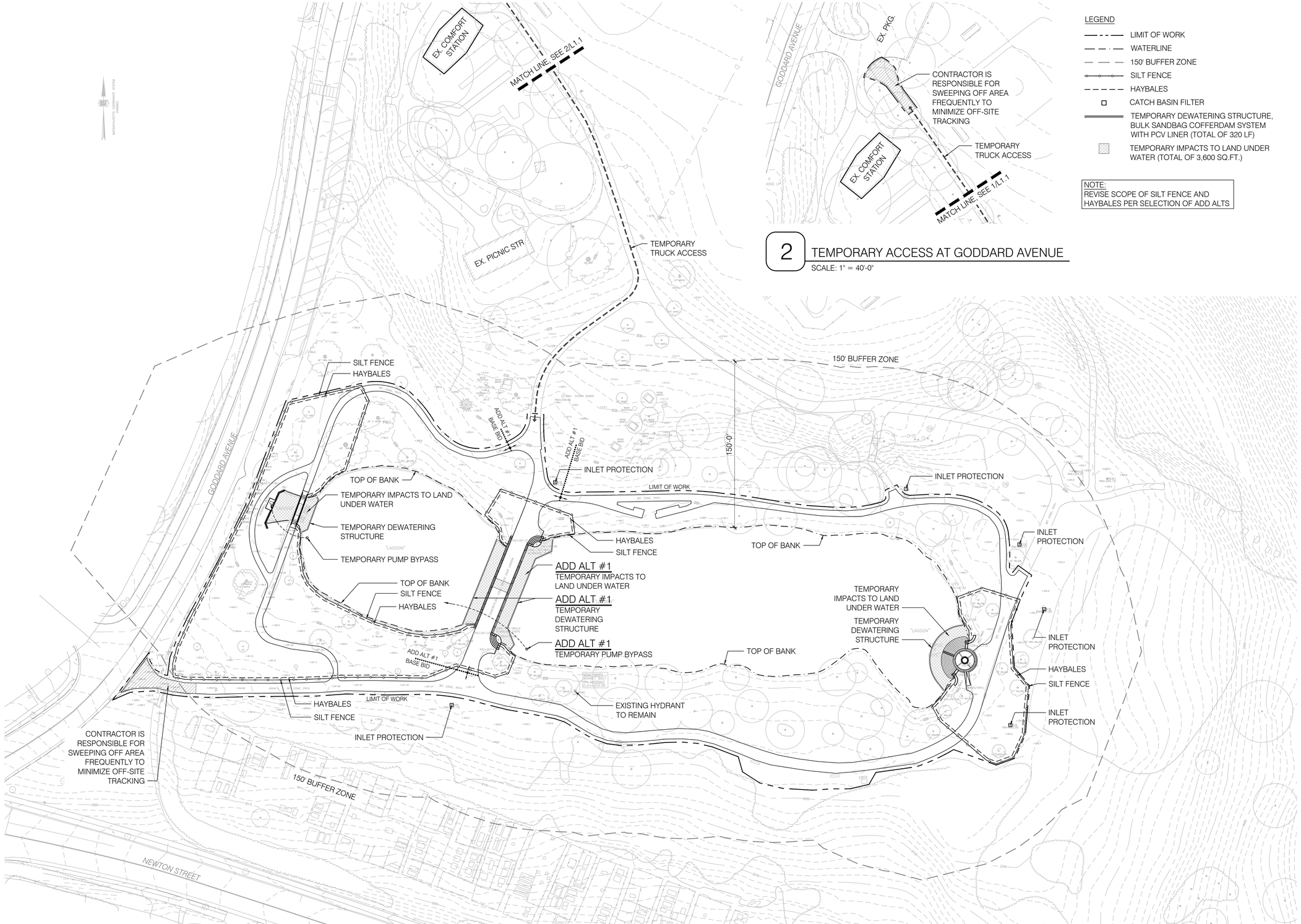

1 EROSION AND SEDIMENTATION CONTROL PLAN

SCALE: 1" = 40'-0"

2 TEMPORARY ACCESS AT GODDARD AVENUE

SCALE: 1" = 40'-0"

LEGEND

- LIMIT OF WORK
- WATERLINE
- 150' BUFFER ZONE
- SILT FENCE
- HAYBALES
- CATCH BASIN FILTER
- TEMPORARY DEWATERING STRUCTURE, BULK SANDBAG COFFERDAM SYSTEM WITH PCV LINER (TOTAL OF 320 LF)
- TEMPORARY IMPACTS TO LAND UNDER WATER (TOTAL OF 3,600 SQ.FT.)

NOTE:
REVISE SCOPE OF SILT FENCE AND HAYBALES PER SELECTION OF ADD ALTS

0 20' 40' 80' 120'

GRAPHIC SCALE : 1" = 40'-0"

kmdg
KLOPFER MARTIN DESIGN GROUP

69 CANAL STREET | 2ND FLOOR
BOSTON, MA 02114
t: 617.227.2560
info@klopfermartin.com

CLIENT:

TOWN OF BROOKLINE
333 WASHINGTON STREET
BROOKLINE, MA 02445

REVISIONS:

REV	DATE	NOTE

PROJECT:

LARZ LAGOON STRUCTURES
PROJECT # 1811
BROOKLINE, MA 02445

DRAWING:

EROSION AND SEDIMENTATION CONTROL PLAN

BID SET

DRAWN: EB
REVIEW: KP

SCALE: 1" = 40'-0"

DATE: JULY 6, 2020

SHEET:

L1.1

DEMOLITION NOTES:

1. REFER TO L1.1 FOR EROSION AND SEDIMENTATION CONTROL PLAN.
2. CONTRACTOR SHALL VERIFY ALL EXISTING CONDITIONS IN THE FIELD AND REPORT ANY DISCREPANCIES BETWEEN PLANS AND ACTUAL EXISTING CONDITIONS TO THE OWNER'S REPRESENTATIVE. DIMENSIONS OF PROPOSED CONSTRUCTION SHOWN SHALL BE VERIFIED IN THE FIELD. ANY DISCREPANCIES SHALL BE REPORTED TO THE OWNER'S REPRESENTATIVE.
3. THE LOCATIONS OF UNDERGROUND UTILITIES SHOWN ON THIS PLAN ARE DIAGRAMMATIC ONLY, AND ALL UTILITIES MAY NOT BE SHOWN. THE CONTRACTOR SHALL CONTACT THE PROPER LOCATION AUTHORITIES OR RESPECTIVE UTILITY COMPANY TO CONFIRM THE LOCATION OF ALL EXISTING UTILITIES BEFORE COMMENCING WORK. ANY DAMAGE DUE TO FAILURE OF THE CONTRACTOR TO CONTACT THE PROPER AUTHORITIES SHALL BE BORNE BY THE CONTRACTOR.
4. PRIOR TO COMMENCING ANY EXCAVATION WORK, THE CONTRACTOR SHALL NOTIFY ALL UTILITY COMPANIES IN ACCORDANCE WITH THE "DIG SAFE" NOTIFICATION PROCEDURES. THE "DIG SAFE" TELEPHONE NUMBER FOR MASSACHUSETTS IS 1-888-DIG-SAFE (344-7233).
5. EXCAVATION REQUIRED WITHIN PROXIMITY OF EXISTING UTILITY LINES SHALL BE DONE BY HAND. CONTRACTOR SHALL REPAIR ANY DAMAGE TO EXISTING UTILITY LINES OR STRUCTURES INCURRED DURING CONSTRUCTION OPERATIONS AT NO COST TO OWNER.
6. CARE SHOULD BE TAKEN IN ALL EXCAVATIONS DUE TO POSSIBLE EXISTENCE OF UNRECORDED UTILITY LINES.
7. CONTRACTOR IS RESPONSIBLE FOR ANY DAMAGE INSIDE AND OUTSIDE THE LIMIT OF WORK DUE TO THEIR CONTRACT OPERATIONS. ANY AREA OUTSIDE THE LIMIT OF WORK THAT IS DISTURBED SHALL BE RESTORED TO ITS ORIGINAL CONDITION AT NO COST TO OWNER.
8. TREE PROTECTION SYMBOLS ARE APPROXIMATE. OWNER'S REPRESENTATIVE SHALL BE PRESENT DURING CLEARING TO FLAG TREES TO REMAIN.
9. TWO LOCATIONS FOR CONSTRUCTION ACCESS SHALL BE PERMITTED FROM GODDARD AVE. APPROXIMATE LOCATIONS SHOWN SHEET L1.1. FINAL LOCATIONS TO BE DETERMINED AND APPROVED BY OWNER'S REPRESENTATIVE.
10. REFER TO DIVISION 2 SPECIFICATIONS FOR ADDITIONAL DEMOLITION REQUIREMENTS, INCLUDING RETENTION OF HISTORIC FINISHES AND ELEMENTS FOR REPRODUCTION.

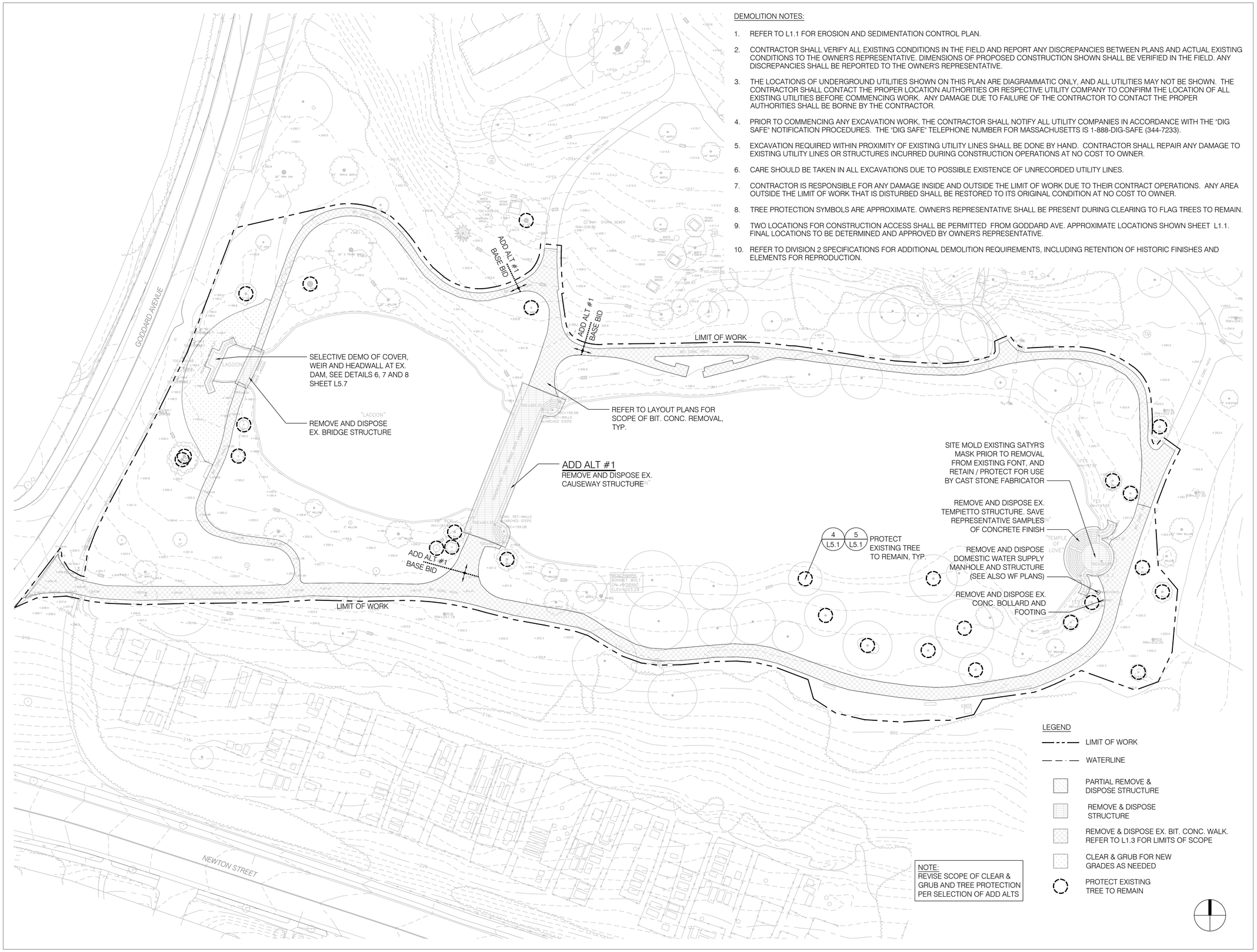

kmdg
KLOPFER MARTIN DESIGN GROUP

69 CANAL STREET | 2ND FLOOR
BOSTON, MA 02114
t: 617.227.2560
info@klopfermartin.com

CLIENT:

TOWN OF BROOKLINE
333 WASHINGTON STREET
BROOKLINE, MA 02445

REVISIONS:

REV DATE NOTE

PROJECT:

LARZ LAGOON STRUCTURES
PROJECT # 1811
BROOKLINE, MA 02445

DRAWING:

DEMOLITION PLAN

BID SET

DRAWN: EB
REVIEW: KP

SCALE: 1" = 30'-0"

DATE: JULY 6, 2020

SHEET:

L1.2

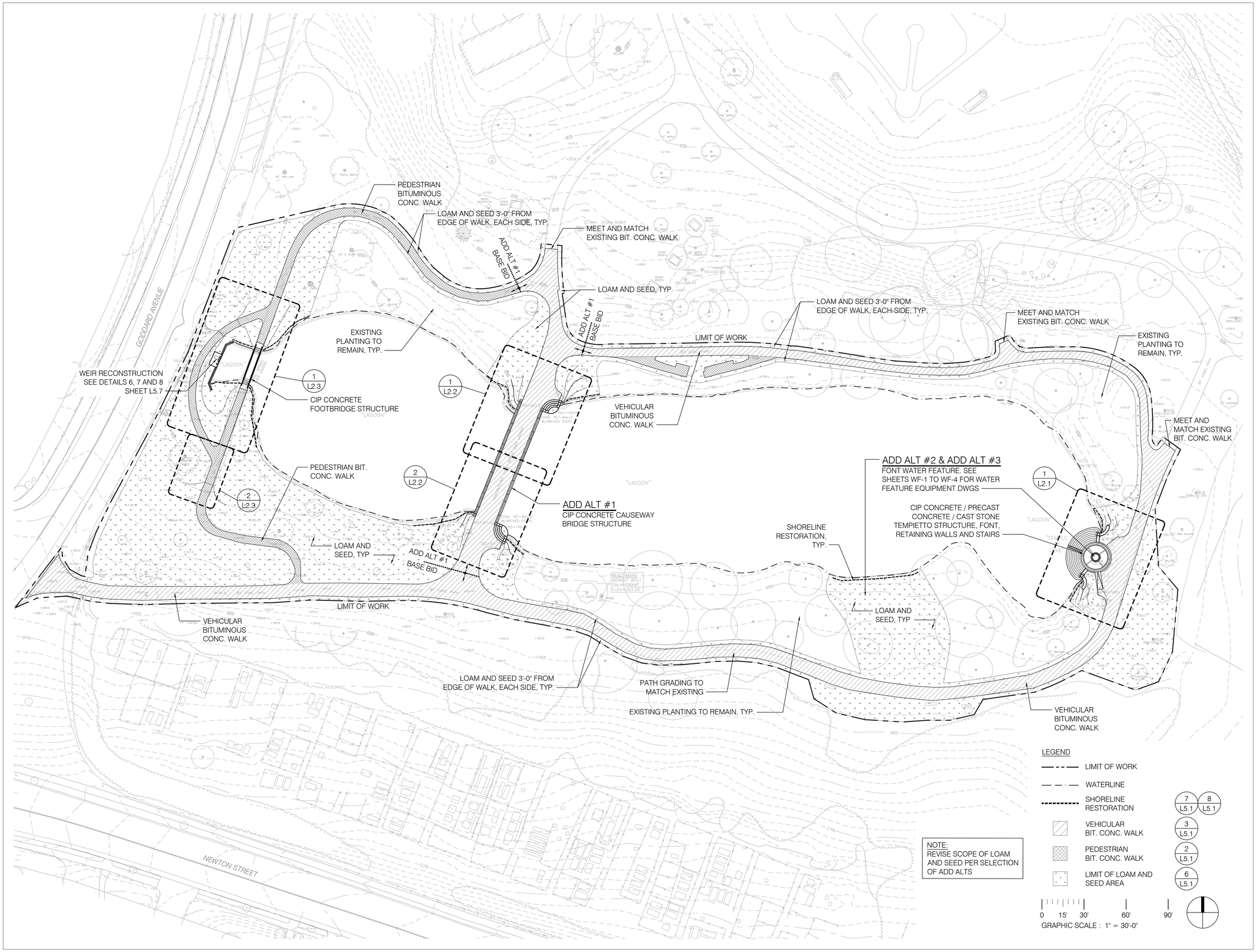

NOTE:
REVISE SCOPE OF LOAM AND SEED PER SELECTION OF ADD ALTS

kmdg
KLOPFER MARTIN DESIGN GROUP

69 CANAL STREET | 2ND FLOOR
BOSTON, MA 02114
t: 617.227.2560
info@klopfermartin.com

CLIENT:

TOWN OF BROOKLINE
333 WASHINGTON STREET
BROOKLINE, MA 02445

REVISIONS:

REV	DATE	NOTE

PROJECT:

LARZ LAGOON STRUCTURES
PROJECT # 1811
BROOKLINE, MA 02445

DRAWING:

SITE MATERIALS AND GRADING PLAN

BID SET

DRAWN: EB
REVIEW: KP

SCALE: 1" = 30'-0"

DATE: JULY 6, 2020

SHEET:

L1.3

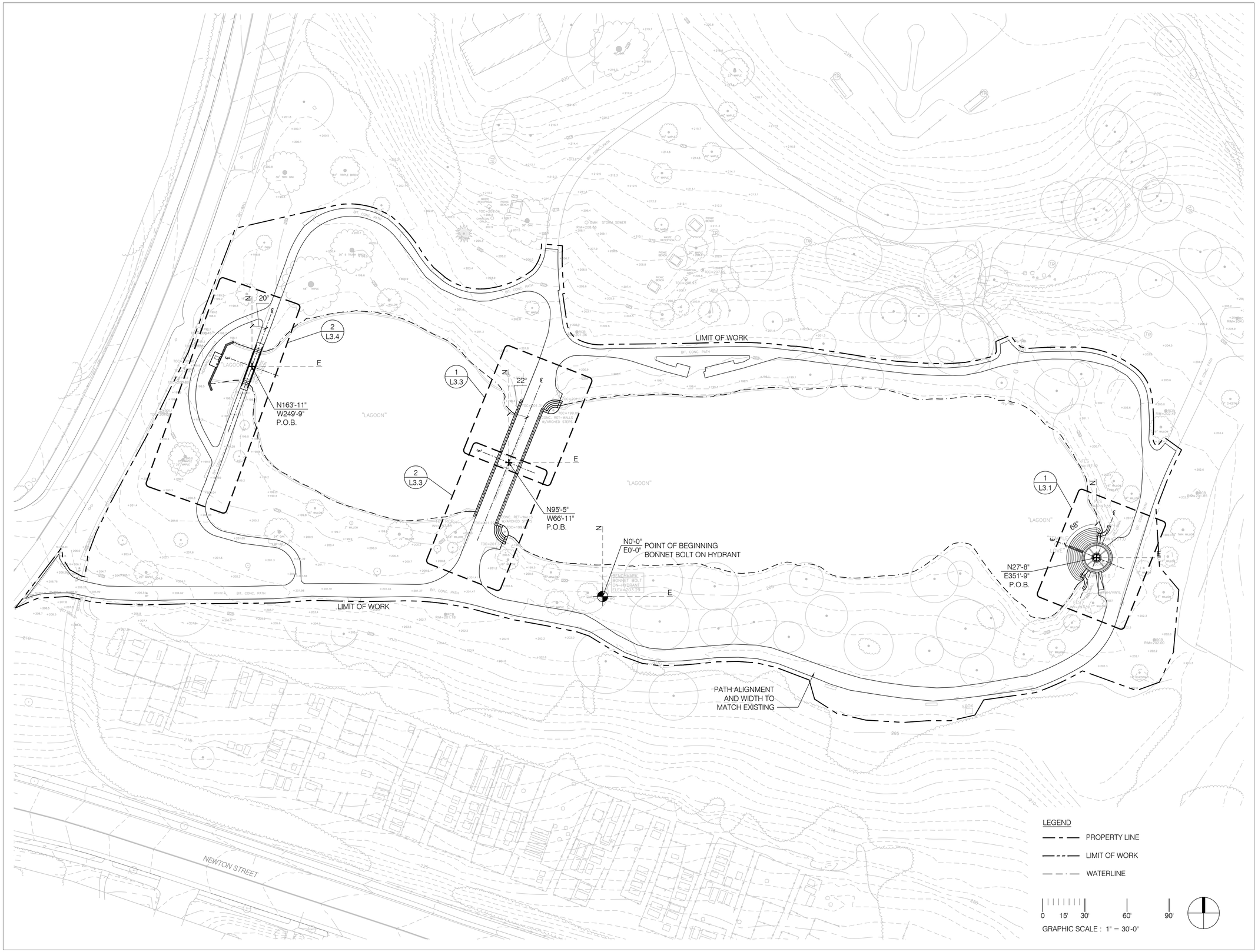

kmdg
KLOPFER MARTIN DESIGN GROUP

69 CANAL STREET | 2ND FLOOR
BOSTON, MA 02114
t: 617.227.2560
info@klopfermartin.com

CLIENT:

TOWN OF BROOKLINE
333 WASHINGTON STREET
BROOKLINE, MA 02445

REVISIONS:

REV	DATE	NOTE

PROJECT:

LARZ LAGOON STRUCTURES
PROJECT # 1811
BROOKLINE, MA 02445

DRAWING:

SITE LAYOUT PLAN

BID SET

DRAWN: EB
REVIEW: KP

SCALE: 1" = 30'-0"

DATE: JULY 6, 2020

SHEET:

L1.4

NOTES:
1. SEE STRUCTURAL DWGS.
2. CAD MODEL TO BE PROVIDED BY LANDSCAPE ARCHITECT FOR TEMPIETTO, TO BE USED FOR REFERENCE ONLY.
3. FABRICATOR TO MAKE OWN TEMPIETTO MODEL FOR FABRICATION PURPOSES.

LEGEND

	LIMIT OF WORK	
	WATERLINE	
P1	BIT. CONC. PAVING - FULL DEPTH	2/L5.1, 3/L5.1
P2	C.I.P. CONC. PAVING	1/L5.1
R1	GUARDRAIL - TYPE 'A'	4/L5.2, 2/L5.2
R2	GUARDRAIL - TYPE 'B'	1/L5.3, 2/L5.3
R3	HANDRAIL	4/L5.3
C1	C.I.P. CONC. RETAINING WALL	
C2	C.I.P. CONC. STEPS	
C3	C.I.P. BRIDGE STRUCTURE	
C4	C.I.P. WEIR STRUCTURE	
PC	PRECAST CONC. SITE ELEMENT	
CS	CAST STONE SITE ELEMENT	
F1	PREFABRICATED CAST STONE URN	4/L5.4

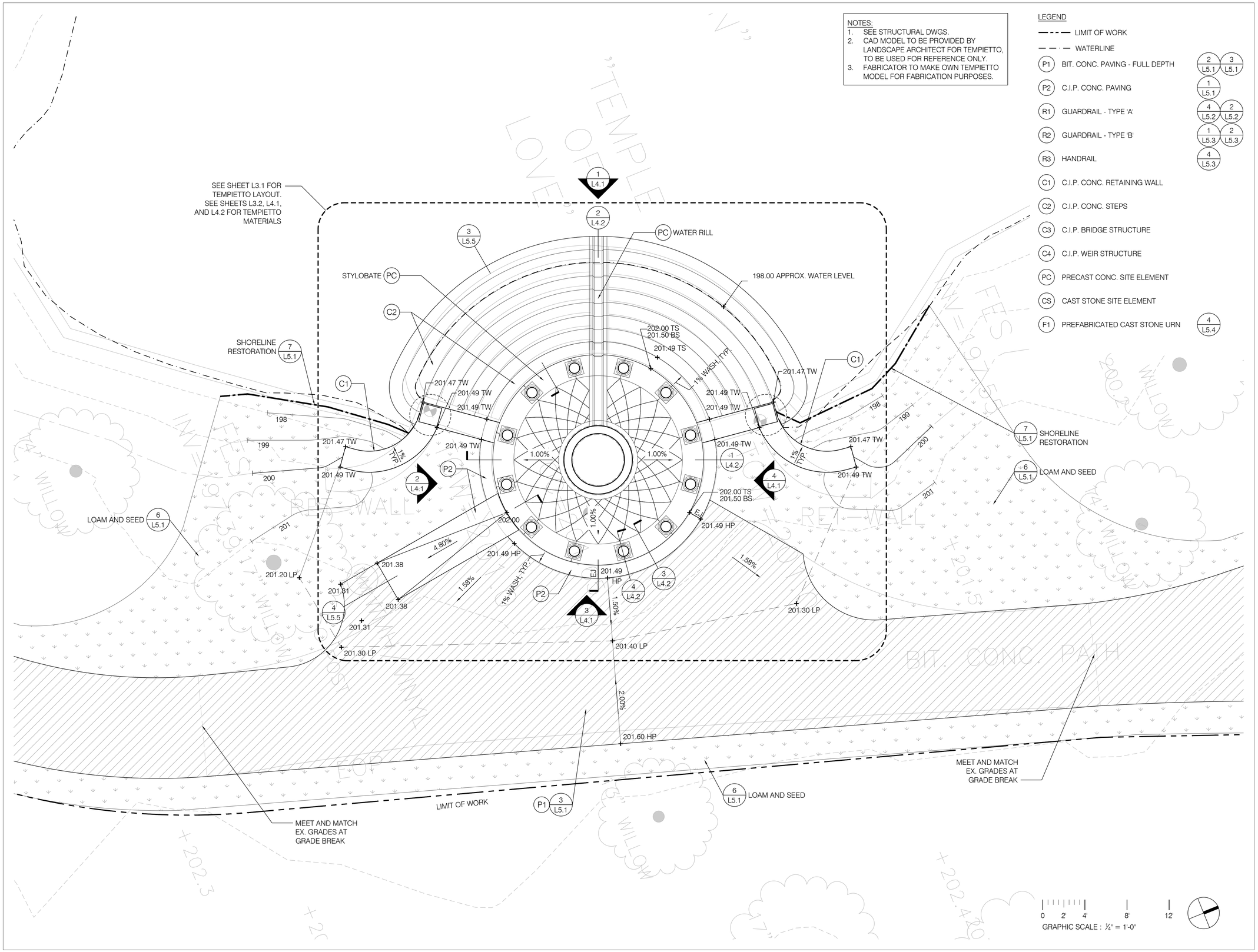

kmdg KLOPFER MARTIN DESIGN GROUP

69 CANAL STREET | 2ND FLOOR
BOSTON, MA 02114
t: 617.227.2560
info@klopfermartin.com

CLIENT:

TOWN OF BROOKLINE
333 WASHINGTON STREET
BROOKLINE, MA 02445

REVISIONS:

REV	DATE	NOTE

PROJECT:

LARZ LAGOON STRUCTURES
PROJECT # 1811
BROOKLINE, MA 02445

DRAWING:

SITE MATERIALS & GRADING PLAN - TEMPIETTO

BID SET

DRAWN: EB
REVIEW: KP

SCALE: 1/4" = 1'-0"

DATE: JULY 6, 2020

SHEET:

L2.1

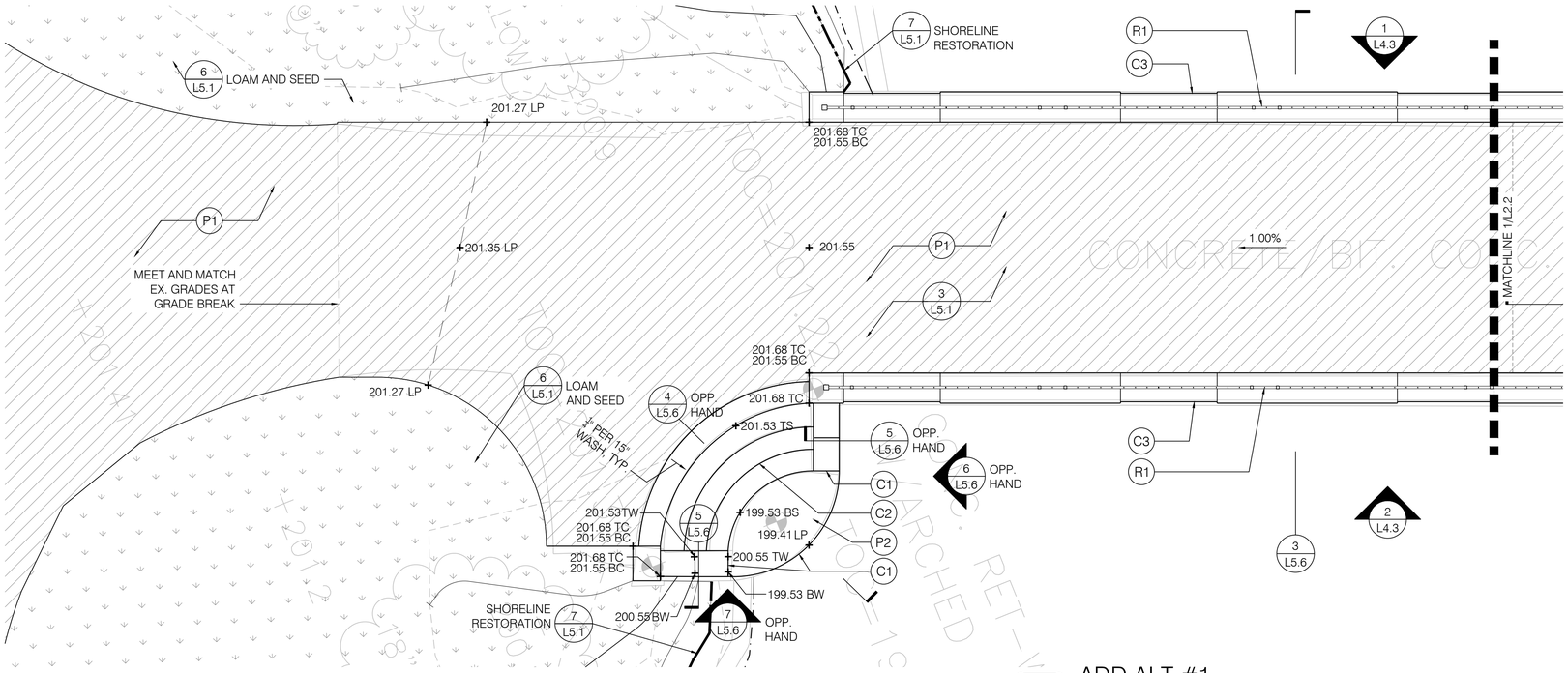

2 ADD ALT #1
CAUSEWAY - SOUTH
SCALE: 1/4" = 1'-0"

LEGEND

- LIMIT OF WORK
- WATERLINE

P1	BIT. CONC. PAVING - FULL DEPTH	2 L5.1, 3 L5.1
P2	C.I.P. CONC. PAVING	1 L5.1
R1	GUARDRAIL - TYPE 'A'	4 L5.2, 2 L5.2
R2	GUARDRAIL - TYPE 'B'	1 L5.3, 2 L5.3
R3	HANDRAIL	4 L5.3
C1	C.I.P. CONC. RETAINING WALL	
C2	C.I.P. CONC. STEPS	
C3	C.I.P. BRIDGE STRUCTURE	
C4	C.I.P. WEIR STRUCTURE	
PC	PRECAST CONC. SITE ELEMENT	
CS	CAST STONE SITE ELEMENT	
F1	PREFABRICATED CAST STONE URN	4 L5.4

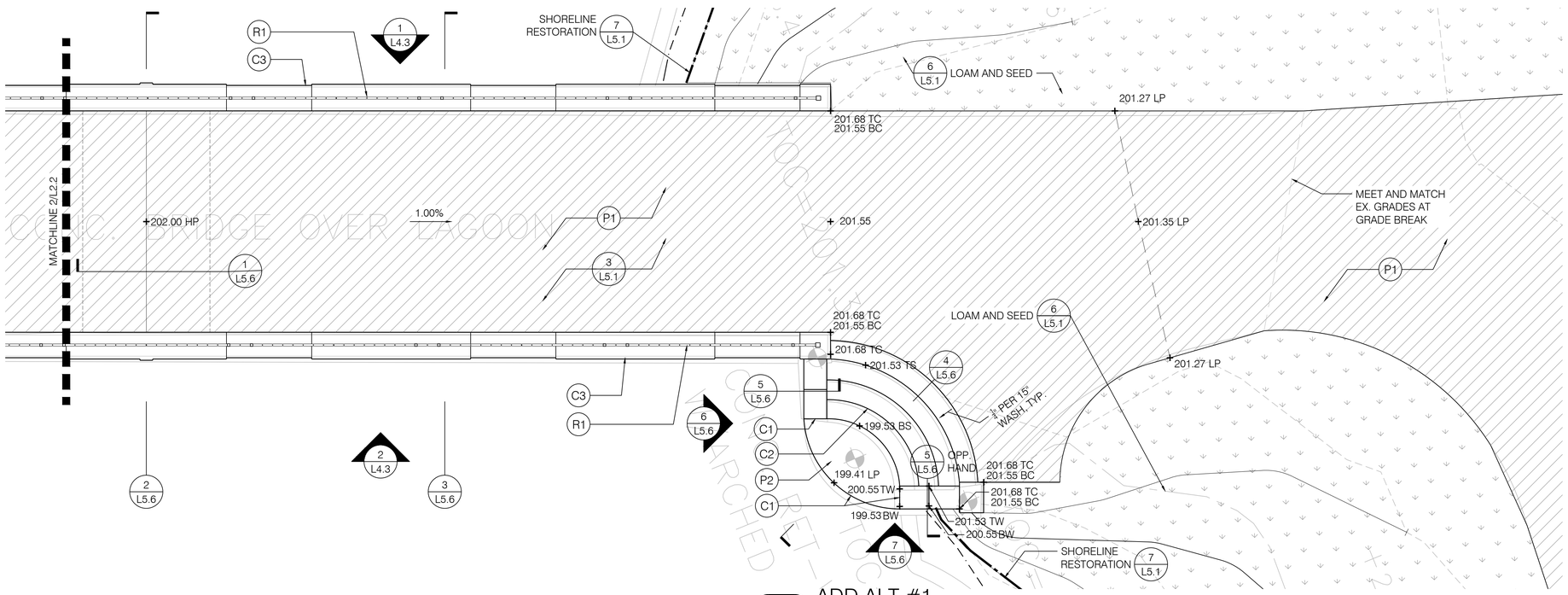

1 ADD ALT #1
CAUSEWAY - NORTH
SCALE: 1/4" = 1'-0"

0 2' 4' 8' 12'
GRAPHIC SCALE : ¼" = 1'-0"

kmdg KLOPFER MARTIN DESIGN GROUP
69 CANAL STREET | 2ND FLOOR
BOSTON, MA 02114
t: 617.227.2560
info@klopfermartin.com

CLIENT:

TOWN OF BROOKLINE
333 WASHINGTON STREET
BROOKLINE, MA 02445

REVISIONS:

REV	DATE	NOTE

PROJECT:

LARZ LAGOON STRUCTURES
PROJECT # 1811
BROOKLINE, MA 02445

DRAWING:

SITE MATERIALS & GRADING PLAN - CAUSEWAY

BID SET

DRAWN: EB
REVIEW: KP

SCALE: 1/4" = 1'-0"

DATE: JULY 6, 2020

SHEET:

L2.2

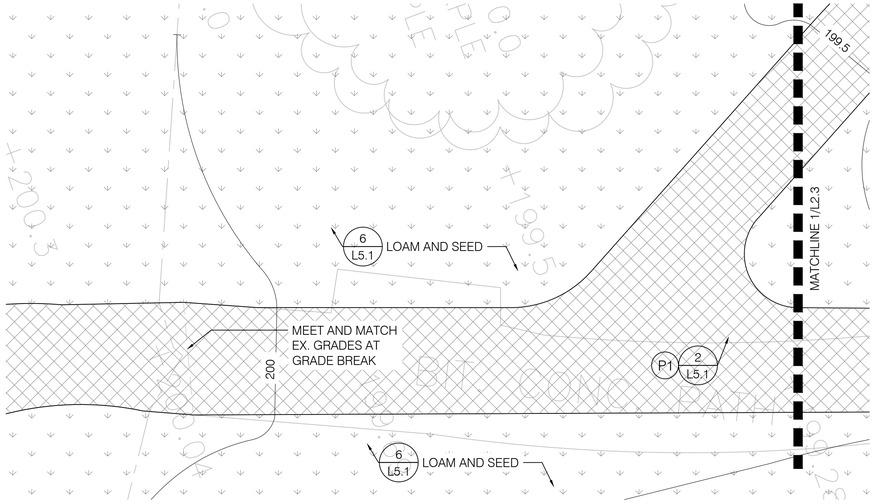

2 BRIDGE AND WEIR APPROACH - SOUTH

SCALE: 1/4" = 1'-0"

NOTE:
WEIR STRUCTURE REPAIRS TO BE BUILT ON TOP OF EXISTING WEIR STRUCTURE AS PART OF BASE BID, SEE DETAILS 6, 7 AND 8 SHEET L5.7. ALL DIMENSIONS ARE FOR INFORMATION ONLY AND SHOULD BE V.I.F.

LEGEND

	LIMIT OF WORK	
	WATERLINE	
P1	BIT. CONC. PAVING - FULL DEPTH	2/L5.1, 3/L5.1
P2	C.I.P. CONC. PAVING	1/L5.1
R1	GUARDRAIL - TYPE 'A'	4/L5.2, 2/L5.2
R2	GUARDRAIL - TYPE 'B'	1/L5.3, 2/L5.3
R3	HANDRAIL	4/L5.3
C1	C.I.P. CONC. RETAINING WALL	
C2	C.I.P. CONC. STEPS	
C3	C.I.P. BRIDGE STRUCTURE	
C4	C.I.P. WEIR STRUCTURE	
PC	PRECAST CONC. SITE ELEMENT	
CS	CAST STONE SITE ELEMENT	
F1	PREFABRICATED CAST STONE URN	4/L5.4

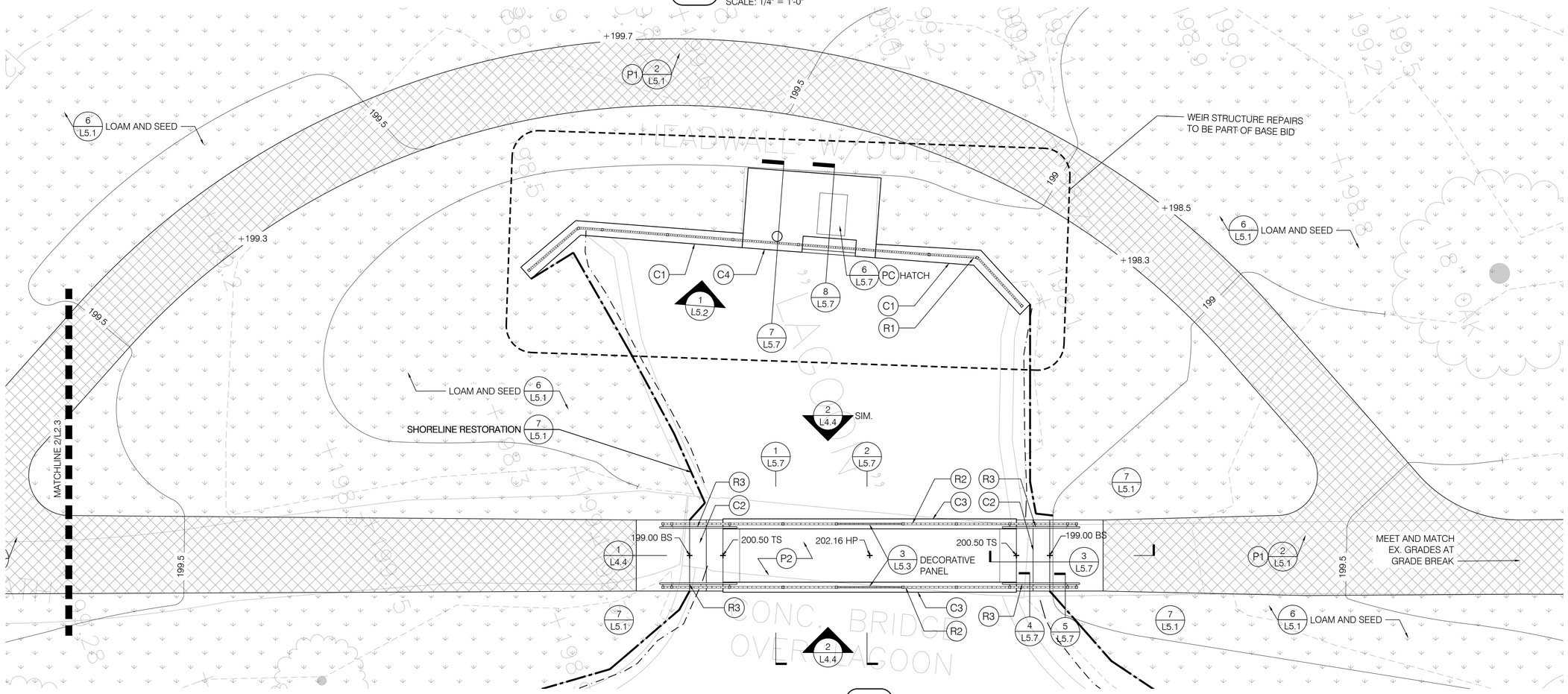

1 BRIDGE AND WEIR - NORTH

SCALE: 1/4" = 1'-0"

0 2' 4' 8' 12'

GRAPHIC SCALE : ¼" = 1'-0"

kmdg KLOPFER MARTIN DESIGN GROUP

69 CANAL STREET | 2ND FLOOR
BOSTON, MA 02114
t: 617.227.2560
info@klopfermartin.com

CLIENT:

TOWN OF BROOKLINE
333 WASHINGTON STREET
BROOKLINE, MA 02445

REVISIONS:

REV	DATE	NOTE

PROJECT:

LARZ LAGOON STRUCTURES
PROJECT # 1811
BROOKLINE, MA 02445

DRAWING:

SITE MATERIALS & GRADING PLAN - BRIDGE AND WEIR

BID SET

DRAWN: EB
REVIEW: KP

SCALE: 1/4" = 1'-0"

DATE: JULY 6, 2020

SHEET:

L2.3

NOTES:
1. SEE STRUCTURAL DWGS.
2. CAD MODEL TO BE PROVIDED BY LANDSCAPE ARCHITECT FOR TAMIPETTO, TO BE USED FOR REFERENCE ONLY.
3. FABRICATOR TO MAKE OWN TEMPIETTO MODEL FOR FABRICATION PURPOSES.

LEGEND

	LIMIT OF WORK	
	WATERLINE	
P1	BIT. CONC. PAVING - FULL DEPTH	2/L5.1, 3/L5.1
P2	C.I.P. CONC. PAVING	1/L5.1
R1	GUARDRAIL - TYPE 'A'	4/L5.2, 2/L5.2
R2	GUARDRAIL - TYPE 'B'	1/L5.3, 2/L5.3
R3	HANDRAIL	4/L5.3
C1	C.I.P. CONC. RETAINING WALL	
C2	C.I.P. CONC. STEPS	
C3	C.I.P. BRIDGE STRUCTURE	
C4	C.I.P. WEIR STRUCTURE	
PC	PRECAST CONC. SITE ELEMENT	
CS	CAST STONE SITE ELEMENT	
F1	PREFABRICATED CAST STONE URN	4/L5.4

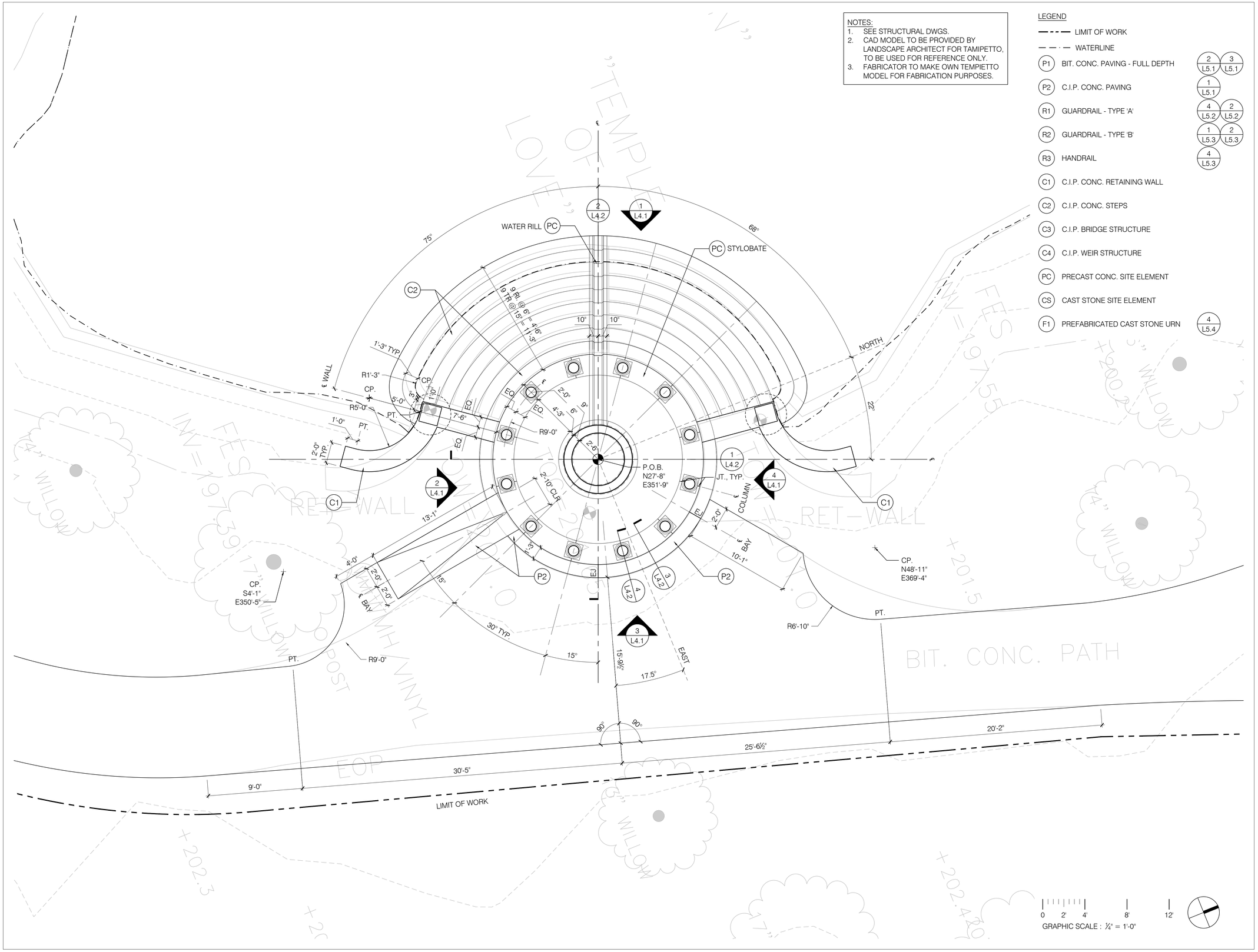

kmdg
KLOPFER MARTIN DESIGN GROUP
69 CANAL STREET | 2ND FLOOR
BOSTON, MA 02114
t: 617.227.2560
info@klopfermartin.com

CLIENT:

TOWN OF BROOKLINE
333 WASHINGTON STREET
BROOKLINE, MA 02445

REVISIONS:

REV DATE NOTE

PROJECT:

LARZ LAGOON STRUCTURES
PROJECT # 1811
BROOKLINE, MA 02445

DRAWING:

TEMPIETTO PLANS - 1

BID SET

DRAWN: EB
REVIEW: KP

SCALE: 1/4" = 1'-0"

DATE: JULY 6, 2020

SHEET:

L3.1

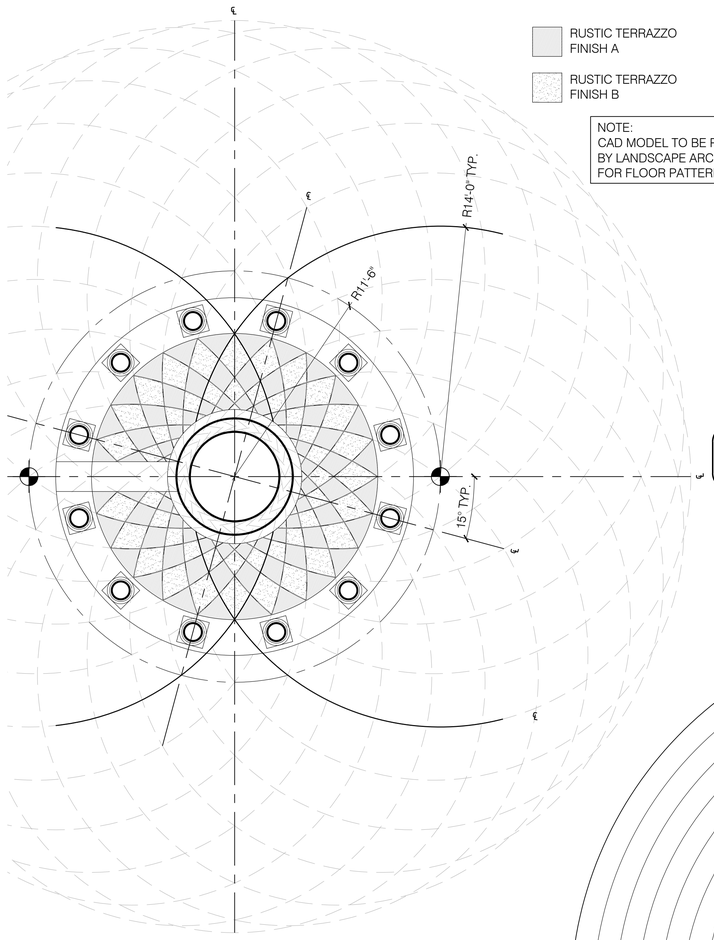

RUSTIC TERRAZZO FINISH A

RUSTIC TERRAZZO FINISH B

NOTE:
CAD MODEL TO BE PROVIDED BY LANDSCAPE ARCHITECT FOR FLOOR PATTERN

4 TEMPIETTO FLOOR PATTERN LAYOUT PLAN

SCALE: 1/4" = 1'-0"

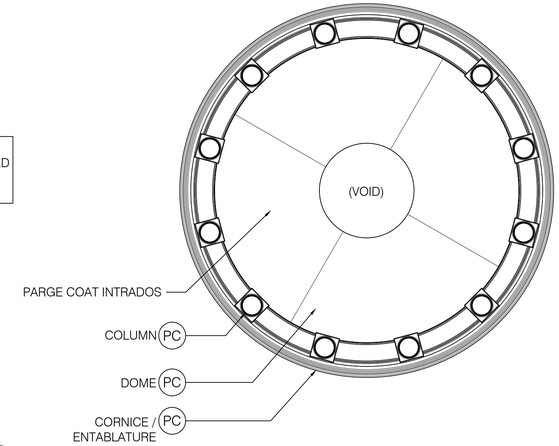

3 TEMPIETTO REFLECTED CEILING PLAN

SCALE: 1/4" = 1'-0"

NOTES:
1. SEE STRUCTURAL DWGS.
2. CAD MODEL TO BE PROVIDED BY LANDSCAPE ARCHITECT FOR TAMIPETTO, TO BE USED FOR REFERENCE ONLY.
3. FABRICATOR TO MAKE OWN TEMPIETTO MODEL FOR FABRICATION PURPOSES.

LEGEND

	LIMIT OF WORK	
	WATERLINE	
P1	BIT. CONC. PAVING - FULL DEPTH	2/L5.1, 3/L5.1
P2	C.I.P. CONC. PAVING	1/L5.1
R1	GUARDRAIL - TYPE 'A'	4/L5.2, 2/L5.2
R2	GUARDRAIL - TYPE 'B'	1/L5.3, 2/L5.3
R3	HANDRAIL	4/L5.3
C1	C.I.P. CONC. RETAINING WALL	
C2	C.I.P. CONC. STEPS	
C3	C.I.P. BRIDGE STRUCTURE	
C4	C.I.P. WEIR STRUCTURE	
PC	PRECAST CONC. SITE ELEMENT	
CS	CAST STONE SITE ELEMENT	
F1	PREFABRICATED CAST STONE URN	4/L5.4

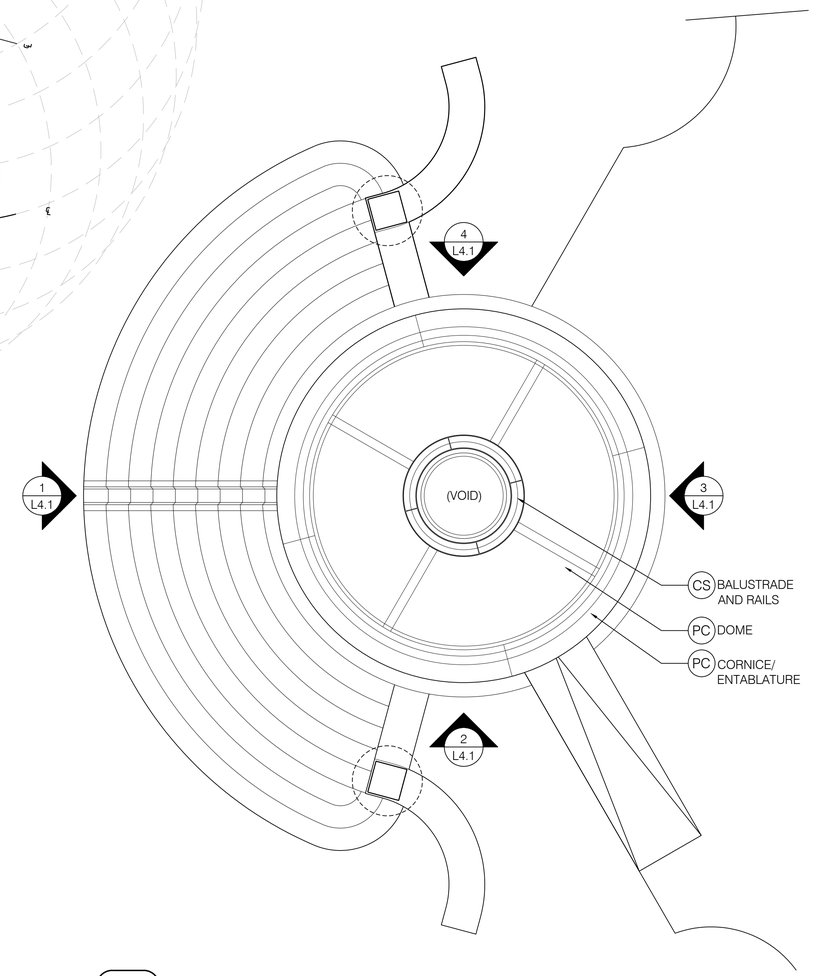

2 TEMPIETTO ROOF PLAN

SCALE: 1/4" = 1'-0"

NOTE:
SEE SHEET L3.1 FOR TEMPIETTO LAYOUT PLAN

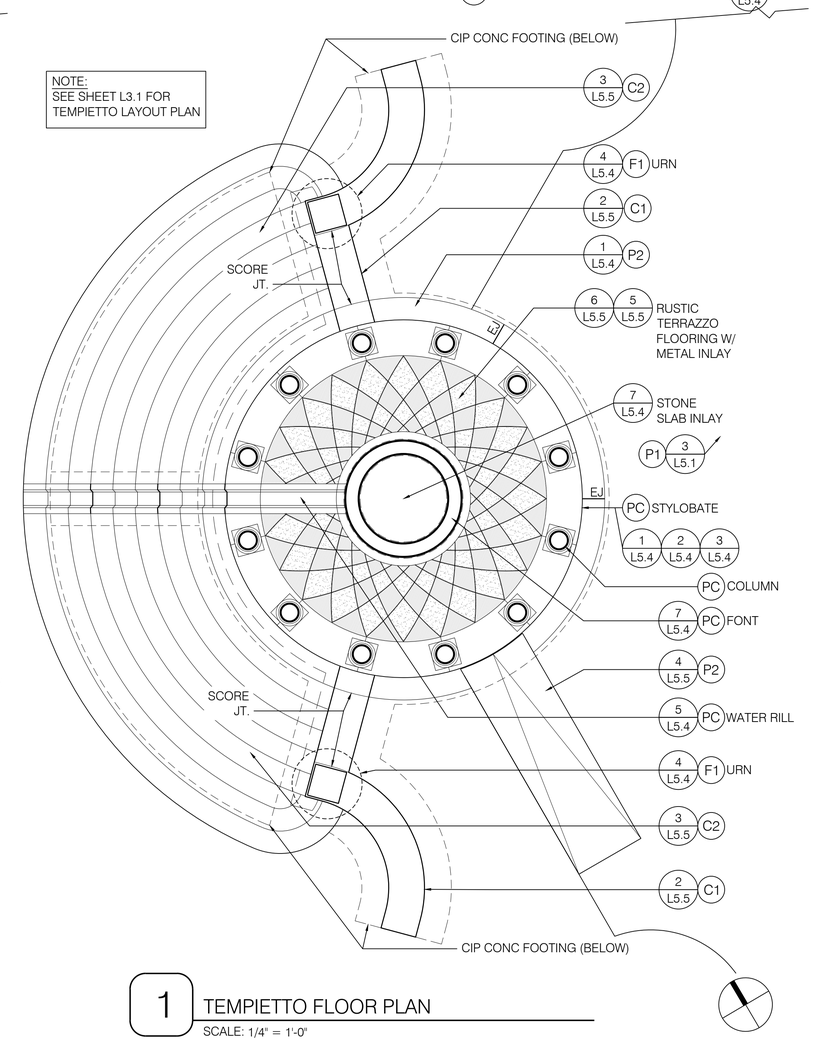

1 TEMPIETTO FLOOR PLAN

SCALE: 1/4" = 1'-0"

kmdg KLOPFER MARTIN DESIGN GROUP

69 CANAL STREET | 2ND FLOOR
BOSTON, MA 02114
t: 617.227.2560
info@klopfermartin.com

CLIENT:

TOWN OF BROOKLINE
333 WASHINGTON STREET
BROOKLINE, MA 02445

REVISIONS:

REV	DATE	NOTE

PROJECT:

LARZ LAGOON STRUCTURES
PROJECT # 1811
BROOKLINE, MA 02445

DRAWING:

TEMPIETTO PLANS - 2

BID SET

DRAWN: EB
REVIEW: KP

SCALE: AS NOTED

DATE: JULY 6, 2020

SHEET:

L3.2

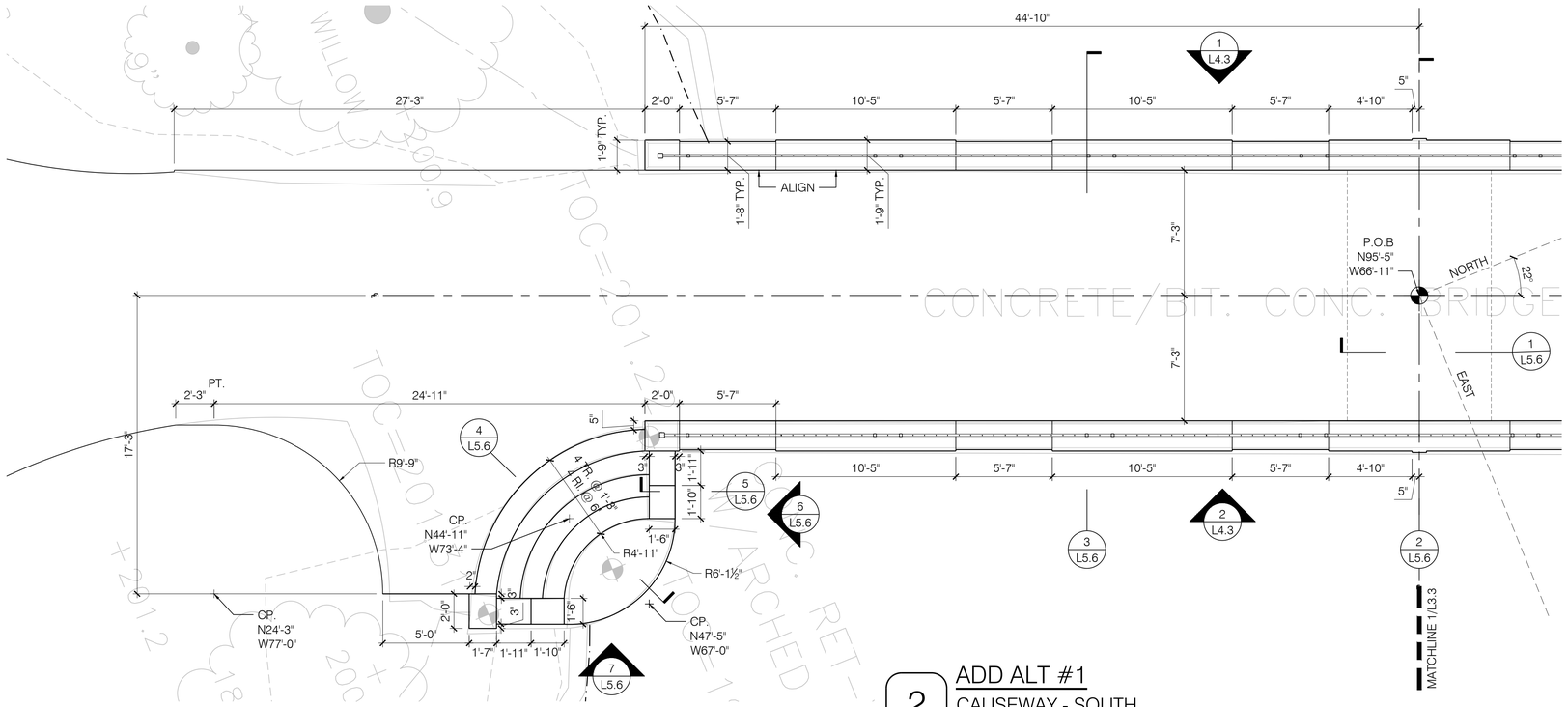

2 ADD ALT #1
CAUSEWAY - SOUTH

SCALE: 1/4" = 1'-0"

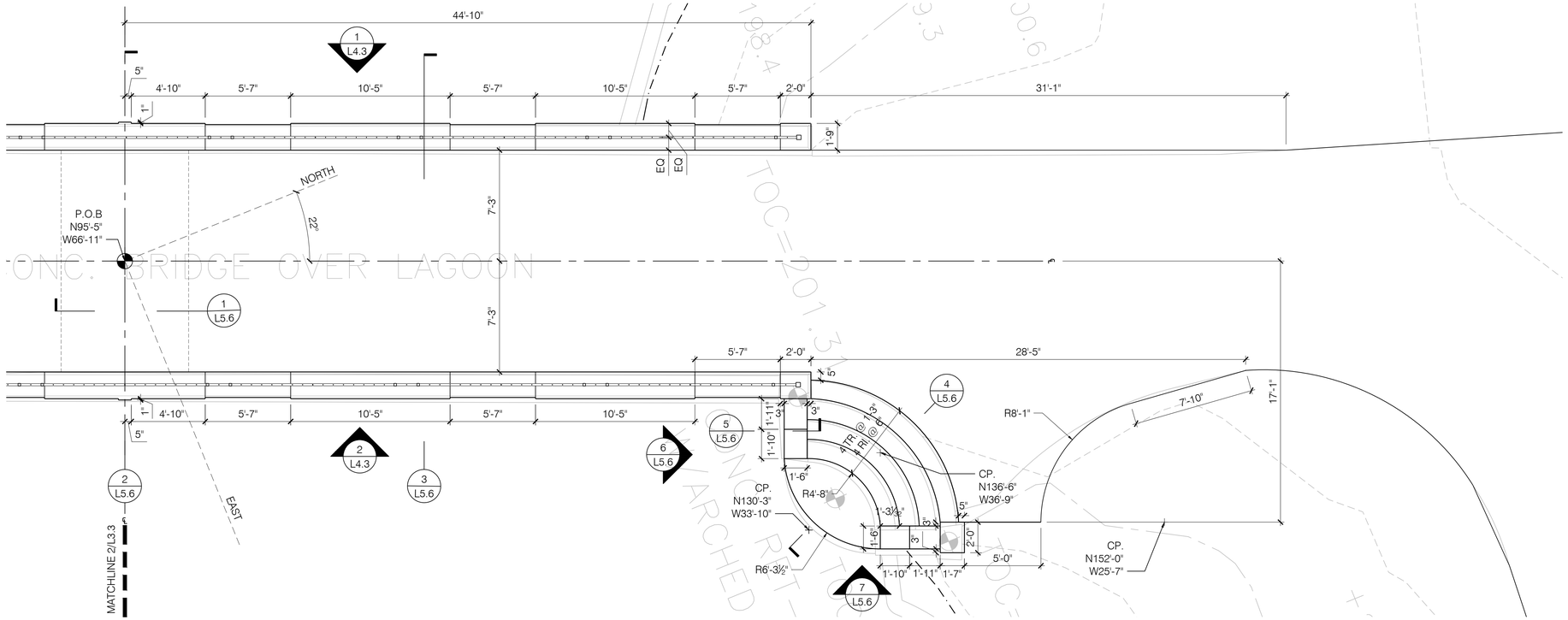

1 ADD ALT #1
CAUSEWAY - NORTH

SCALE: 1/4" = 1'-0"

0 2' 4' 8' 12'

GRAPHIC SCALE : ¼" = 1'-0"

kmdg KLOPFER MARTIN DESIGN GROUP

69 CANAL STREET | 2ND FLOOR
BOSTON, MA 02114
t: 617.227.2560
info@klopfermartin.com

CLIENT:

TOWN OF BROOKLINE
333 WASHINGTON STREET
BROOKLINE, MA 02445

REVISIONS:

REV	DATE	NOTE

PROJECT:

LARZ LAGOON STRUCTURES
PROJECT # 1811
BROOKLINE, MA 02445

DRAWING:

CAUSEWAY PLAN

BID SET

DRAWN: EB
REVIEW: KP

SCALE: 1/4" = 1'-0"

DATE: JULY 6, 2020

SHEET:

L3.3

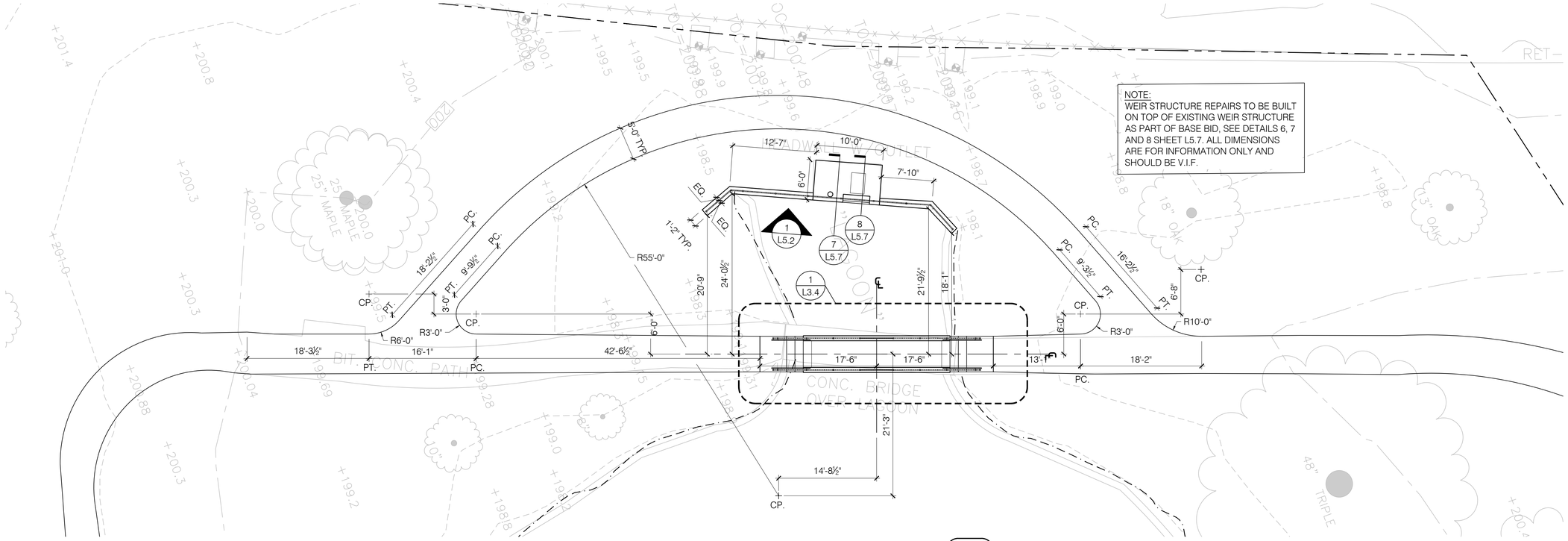

2 BRIDGE AND WEIR PATH

SCALE: 1/8" = 1'-0"

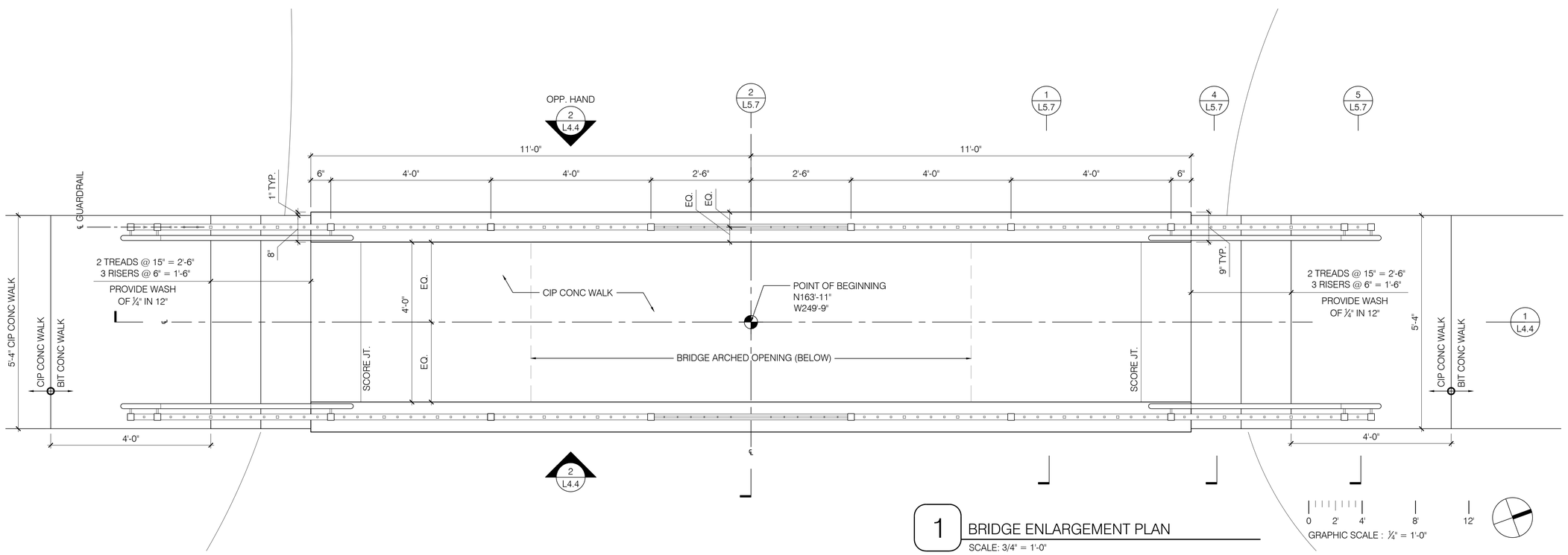

1 BRIDGE ENLARGEMENT PLAN

SCALE: 3/4" = 1'-0"

kmdg
KLOPFER MARTIN DESIGN GROUP

69 CANAL STREET | 2ND FLOOR
BOSTON, MA 02114
t: 617.227.2560
info@klopfermartin.com

CLIENT:

TOWN OF BROOKLINE
333 WASHINGTON STREET
BROOKLINE, MA 02445

REVISIONS:

REV	DATE	NOTE

PROJECT:

LARZ LAGOON STRUCTURES
PROJECT # 1811
BROOKLINE, MA 02445

DRAWING:

BRIDGE AND WEIR PLANS

BID SET

DRAWN: EB
REVIEW: KP

SCALE: 1/4" = 1'-0"

DATE: JULY 6, 2020

SHEET:

L3.4

NOTES:
1. SEE STRUCTURAL DWGS.
2. CAD MODEL TO BE PROVIDED BY LANDSCAPE ARCHITECT FOR TAMIPETTO, TO BE USED FOR REFERENCE ONLY.
3. FABRICATOR TO MAKE OWN TEMPIETTO MODEL FOR FABRICATION PURPOSES.

LEGEND

	LIMIT OF WORK	
	WATERLINE	
P1	BIT. CONC. PAVING - FULL DEPTH	2/L5.1, 3/L5.1
P2	C.I.P. CONC. PAVING	1/L5.1
R1	GUARDRAIL - TYPE 'A'	4/L5.2, 2/L5.2
R2	GUARDRAIL - TYPE 'B'	1/L5.3, 2/L5.3
R3	HANDRAIL	4/L5.3
C1	C.I.P. CONC. RETAINING WALL	
C2	C.I.P. CONC. STEPS	
C3	C.I.P. BRIDGE STRUCTURE	
C4	C.I.P. WEIR STRUCTURE	
PC	PRECAST CONC. SITE ELEMENT	
CS	CAST STONE SITE ELEMENT	
F1	PREFABRICATED CAST STONE URN	4/L5.4

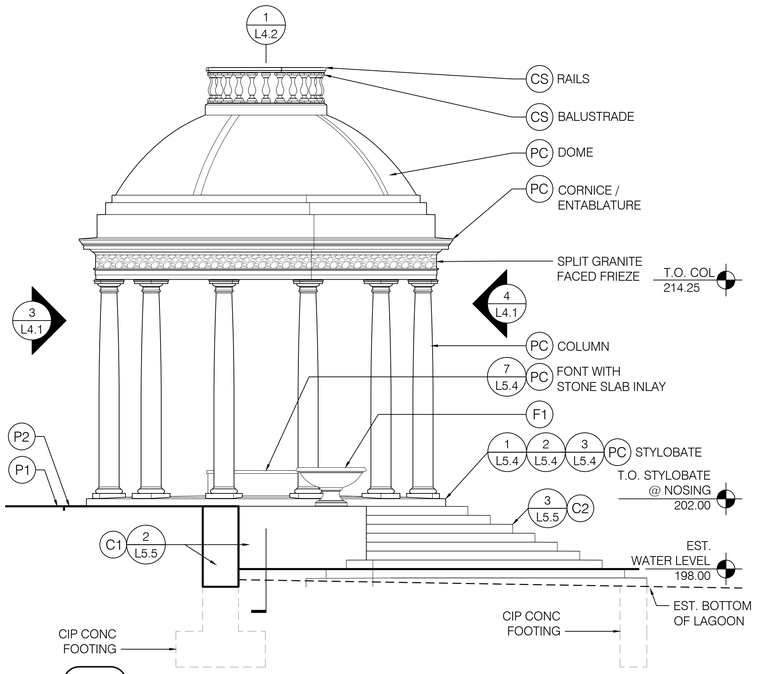

4 TEMPIETTO NORTH ELEVATION
SCALE: 1/4" = 1'-0"

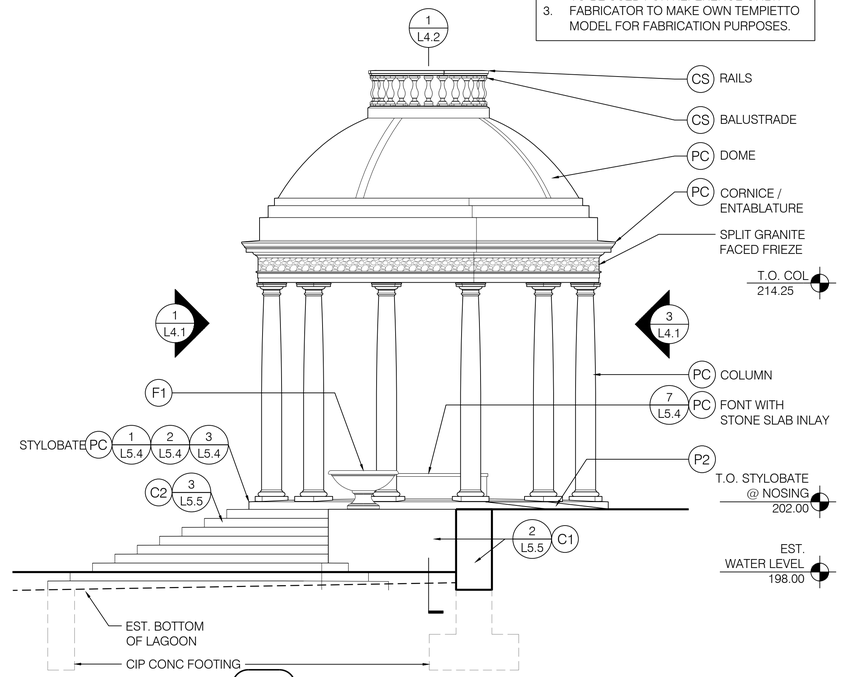

2 TEMPIETTO SOUTH ELEVATION
SCALE: 1/4" = 1'-0"

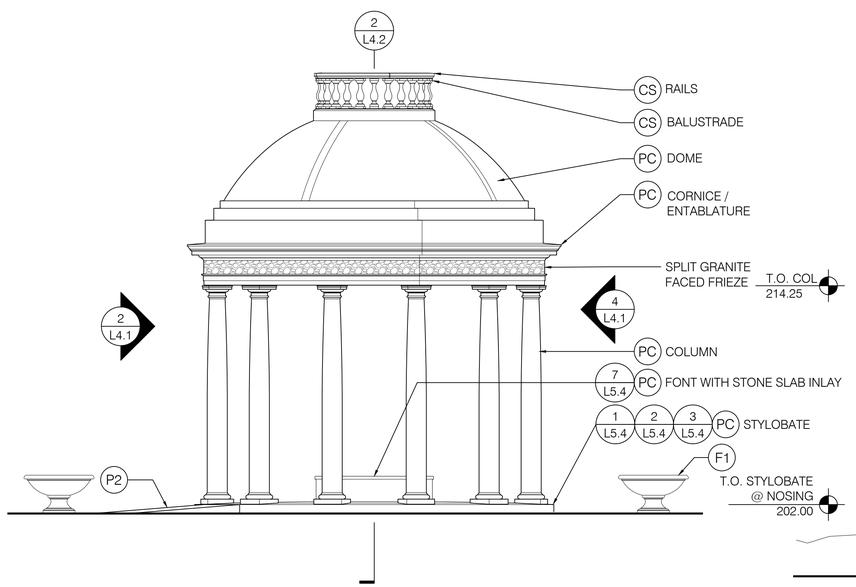

3 TEMPIETTO EAST ELEVATION
SCALE: 1/4" = 1'-0"

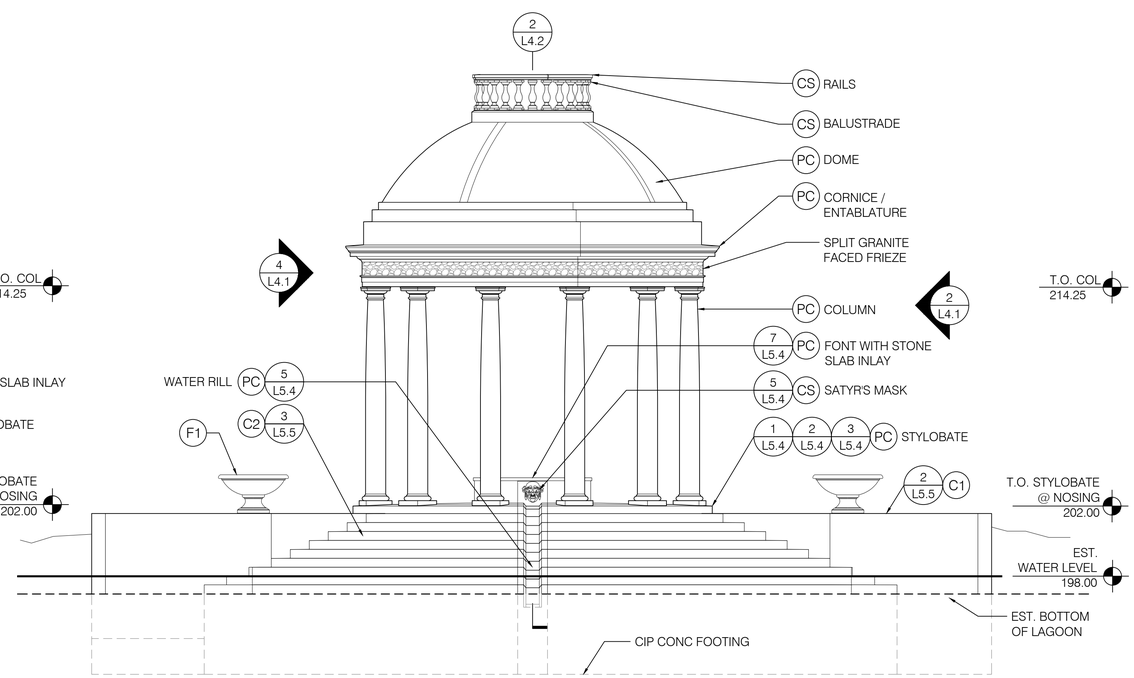

1 TEMPIETTO WEST ELEVATION
SCALE: 1/4" = 1'-0"

kmdg KLOPFER MARTIN DESIGN GROUP
69 CANAL STREET | 2ND FLOOR
BOSTON, MA 02114
t: 617.227.2560
info@klopfermartin.com

CLIENT:
TOWN OF BROOKLINE
333 WASHINGTON STREET
BROOKLINE, MA 02445

REVISIONS:

REV	DATE	NOTE

PROJECT:
LARZ LAGOON STRUCTURES
PROJECT # 1811
BROOKLINE, MA 02445

DRAWING:
TEMPIETTO ELEVATIONS

BID SET

DRAWN: EB
REVIEW: KP

SCALE: AS NOTED

DATE: JULY 6, 2020

SHEET:
L4.1

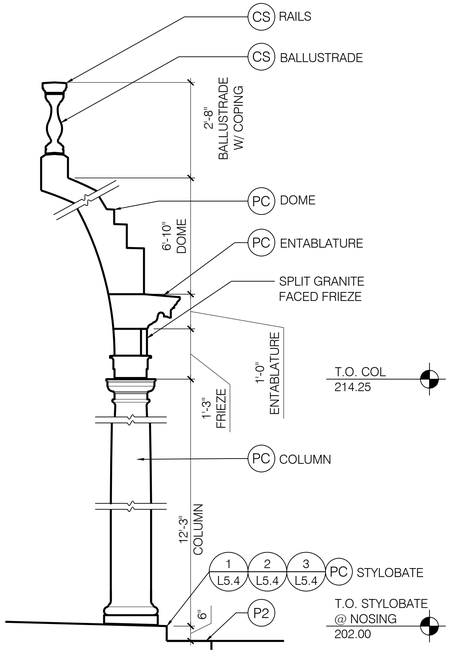

4 WALL SECTION THROUGH COLUMN

SCALE: 1/2" = 1'-0"

NOTES:
1. SEE STRUCTURAL DWGS.
2. CAD MODEL TO BE PROVIDED BY LANDSCAPE ARCHITECT FOR TAMIPETTO, TO BE USED FOR REFERENCE ONLY.
3. FABRICATOR TO MAKE OWN TEMPIETTO MODEL FOR FABRICATION PURPOSES.

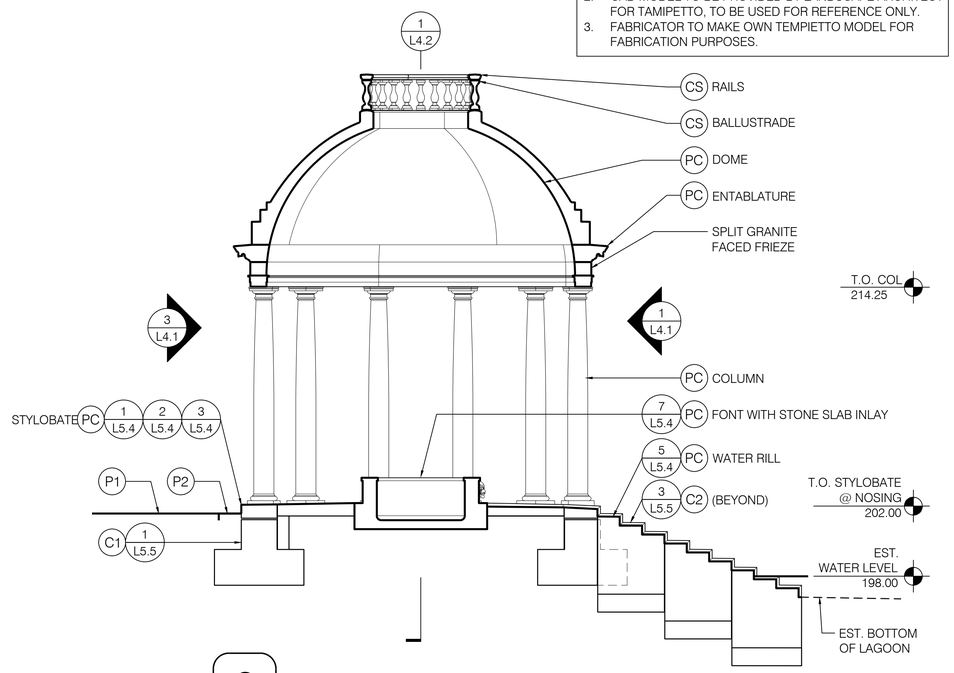

2 TEMPIETTO LONGITUDINAL SECTION

SCALE: 1/4" = 1'-0"

LEGEND

— - - —	LIMIT OF WORK	
— — · —	WATERLINE	
P1	BIT. CONC. PAVING - FULL DEPTH	2 L5.1, 3 L5.1
P2	C.I.P. CONC. PAVING	1 L5.1
R1	GUARDRAIL - TYPE 'A'	4 L5.2, 2 L5.2
R2	GUARDRAIL - TYPE 'B'	1 L5.3, 2 L5.3
R3	HANDRAIL	4 L5.3
C1	C.I.P. CONC. RETAINING WALL	
C2	C.I.P. CONC. STEPS	
C3	C.I.P. BRIDGE STRUCTURE	
C4	C.I.P. WEIR STRUCTURE	
PC	PRECAST CONC. SITE ELEMENT	
CS	CAST STONE SITE ELEMENT	
F1	PREFABRICATED CAST STONE URN	4 L5.4

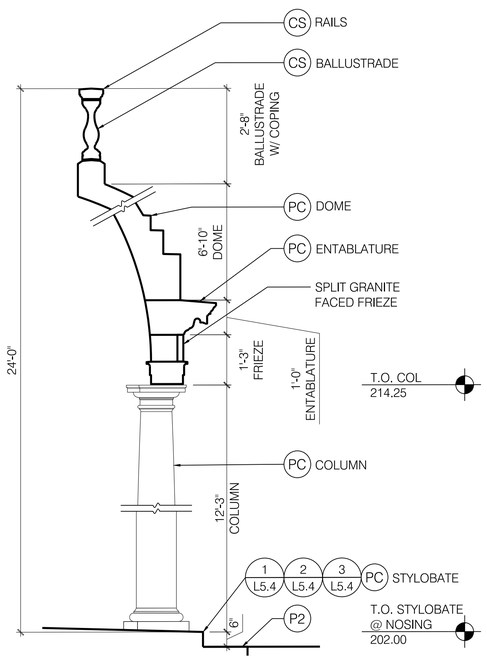

3 WALL SECTION THROUGH CENTERLINE OF BAY

SCALE: 1/2" = 1'-0"

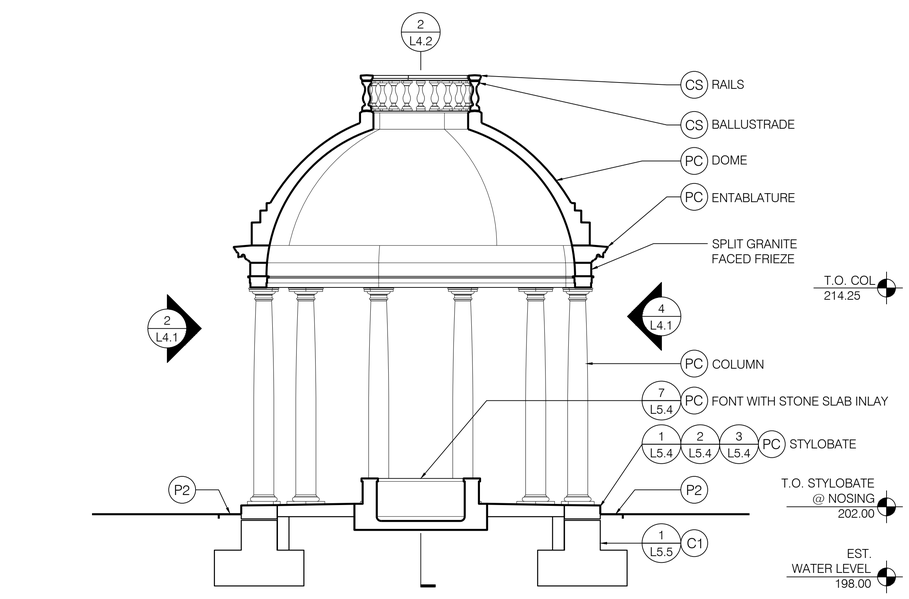

1 TEMPIETTO CROSS SECTION

SCALE: 1/4" = 1'-0"

kmdg
KLOPFER MARTIN DESIGN GROUP
69 CANAL STREET | 2ND FLOOR
BOSTON, MA 02114
t: 617.227.2560
info@klopfermartin.com

CLIENT:

TOWN OF BROOKLINE
333 WASHINGTON STREET
BROOKLINE, MA 02445

REVISIONS:

REV DATE NOTE

PROJECT:

LARZ LAGOON STRUCTURES
PROJECT # 1811
BROOKLINE, MA 02445

DRAWING:

TEMPIETTO SECTIONS

BID SET

DRAWN: EB
REVIEW: KP

SCALE: AS NOTED

DATE: JULY 6, 2020

SHEET:

L4.2

LEGEND

- LIMIT OF WORK
- WATERLINE
- (P1) BIT. CONC. PAVING - FULL DEPTH (2/L5.1) (3/L5.1)
- (P2) C.I.P. CONC. PAVING (1/L5.1)
- (R1) GUARDRAIL - TYPE 'A' (4/L5.2) (2/L5.2)
- (R2) GUARDRAIL - TYPE 'B' (1/L5.3) (2/L5.3)
- (R3) HANDRAIL (4/L5.3)
- (C1) C.I.P. CONC. RETAINING WALL
- (C2) C.I.P. CONC. STEPS
- (C3) C.I.P. BRIDGE STRUCTURE
- (C4) C.I.P. WEIR STRUCTURE
- (PC) PRECAST CONC. SITE ELEMENT
- (CS) CAST STONE SITE ELEMENT
- (F1) PREFABRICATED CAST STONE URN (4/L5.4)

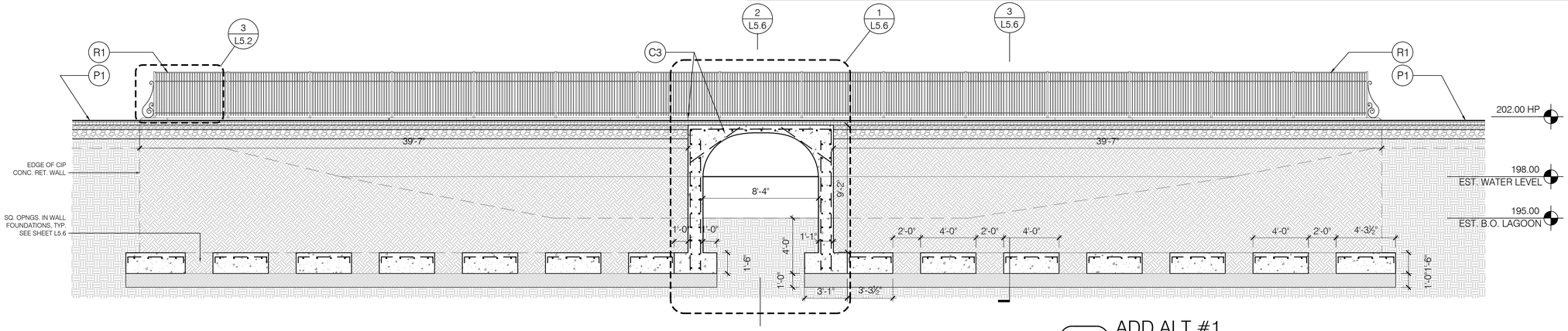

3 ADD ALT #1
CAUSEWAY SECTION VIEW

SCALE: 1/4" = 1'-0"

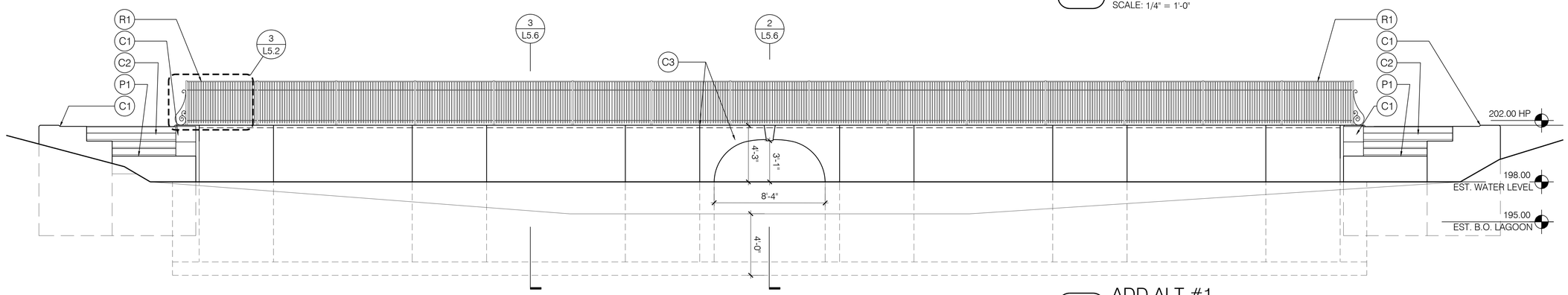

2 ADD ALT #1
CAUSEWAY EAST ELEVATION

SCALE: 1/4" = 1'-0"

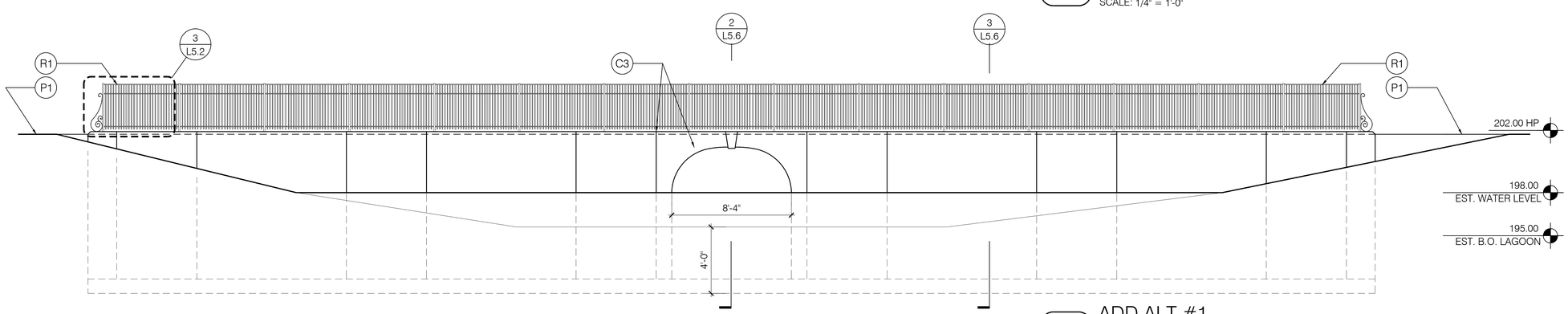

1 ADD ALT #1
CAUSEWAY WEST ELEVATION

SCALE: 1/4" = 1'-0"

kmdg
KLOPFER MARTIN DESIGN GROUP

69 CANAL STREET | 2ND FLOOR
BOSTON, MA 02114
t: 617.227.2560
info@klopfermartin.com

CLIENT:

TOWN OF BROOKLINE
333 WASHINGTON STREET
BROOKLINE, MA 02445

REVISIONS:

REV	DATE	NOTE

PROJECT:

LARZ LAGOON STRUCTURES
PROJECT # 1811
BROOKLINE, MA 02445

DRAWING:

CAUSEWAY SECTIONS AND ELEVATIONS

BID SET

DRAWN: EB
REVIEW: KP

SCALE: AS NOTED

DATE: JULY 6, 2020

SHEET:

L4.3

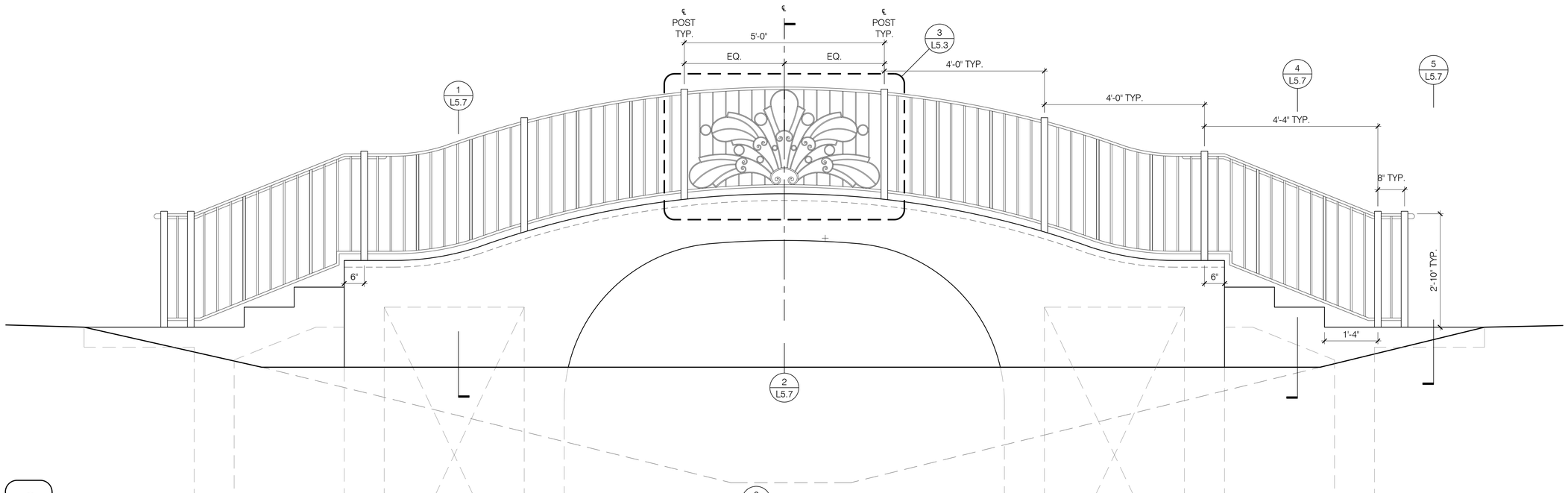

2 BRIDGE ELEVATION

SCALE: 3/4" = 1'-0"

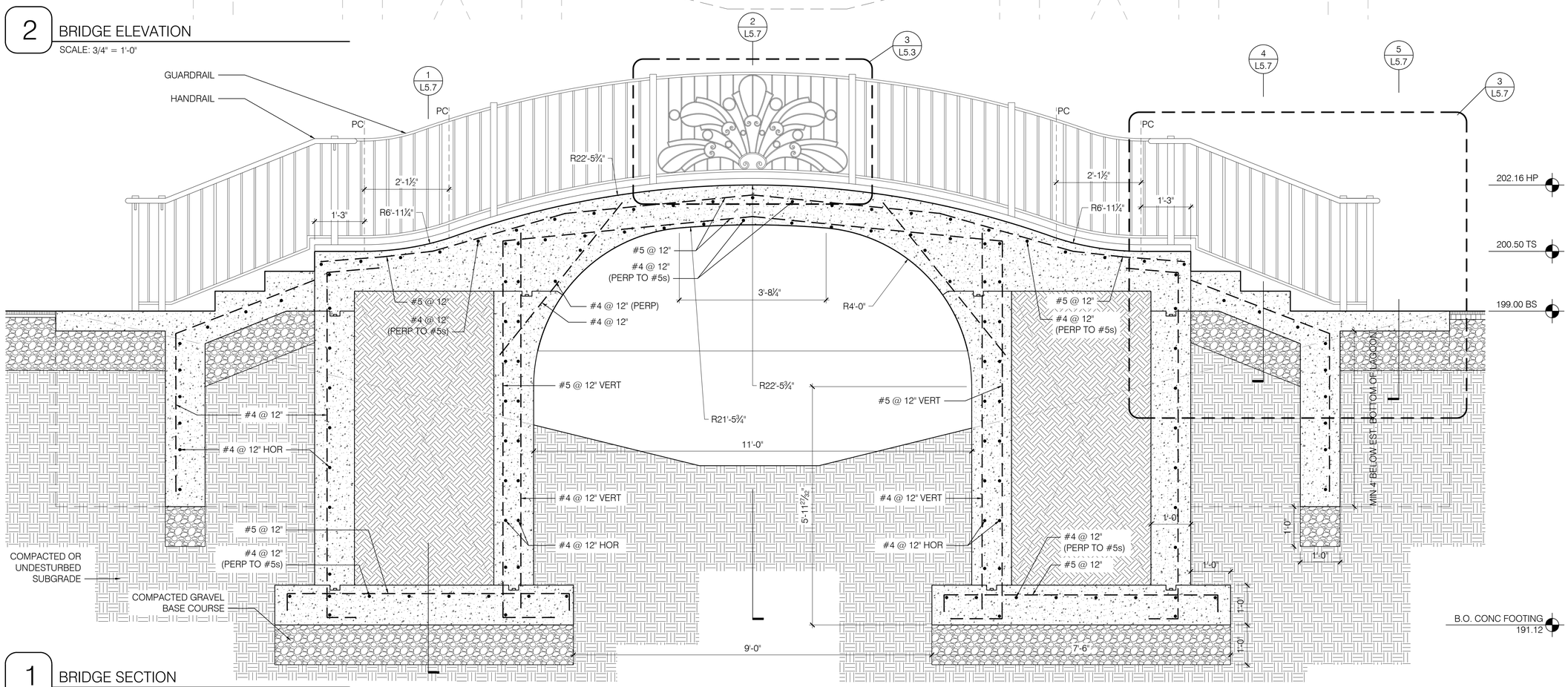

1 BRIDGE SECTION

SCALE: 3/4" = 1'-0"

kmdg
KLOPFER MARTIN DESIGN GROUP

69 CANAL STREET | 2ND FLOOR
BOSTON, MA 02114
t: 617.227.2560
info@klopfermartin.com

CLIENT:

TOWN OF BROOKLINE
333 WASHINGTON STREET
BROOKLINE, MA 02445

REVISIONS:

REV	DATE	NOTE

PROJECT:

LARZ LAGOON STRUCTURES
PROJECT # 1811
BROOKLINE, MA 02445

DRAWING:

BRIDGE SECTIONS AND ELEVATIONS

BID SET

DRAWN: EB
REVIEW: KP

SCALE: AS NOTED

DATE: JULY 6, 2020

SHEET:

L4.4

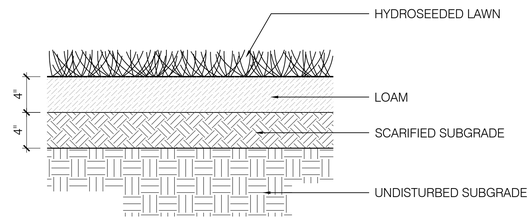

6 LOAM & SEED

SCALE: 1 1/2" = 1'-0"

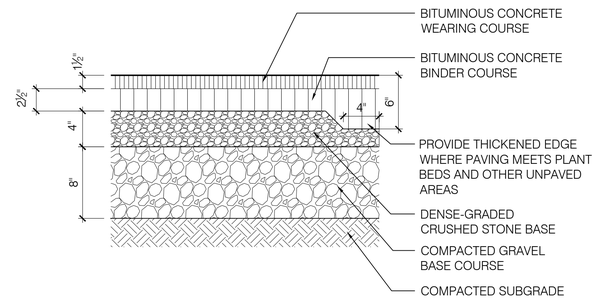

3 VEHICULAR BITUMINOUS CONCRETE PAVING

SCALE: 1 1/2" = 1'-0"

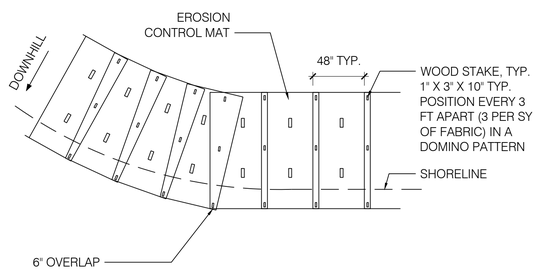

8 SHORELINE RESTORATION - MAT DETAIL

SCALE: 1/4" = 1'-0"

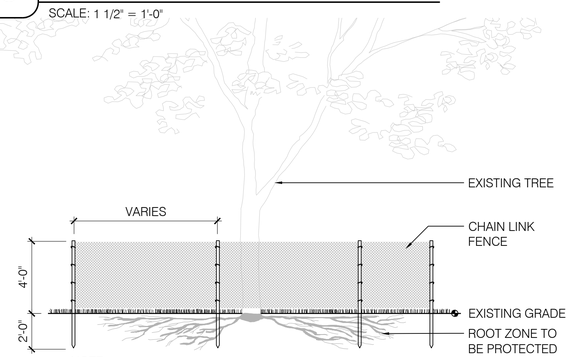

NOTE:
PROTECTIVE BARRICADE TO BE PLACED A MINIMUM OF 10' FROM BASE OF TREE PLUS AN ADDITIONAL 1' FOR EACH ADDITIONAL INCH DBH FOR TREES GREATER THAN 10" DBH. CONFIRM WITH LANDSCAPE ARCHITECT IN THE FIELD. ALL WORK DONE WITHIN PROTECTIVE BARRICADES IS TO BE DONE BY HAND AND LIGHT EQUIPMENT.

5 EXISTING TREE PROTECTION

SCALE: 1/4" = 1'-0"

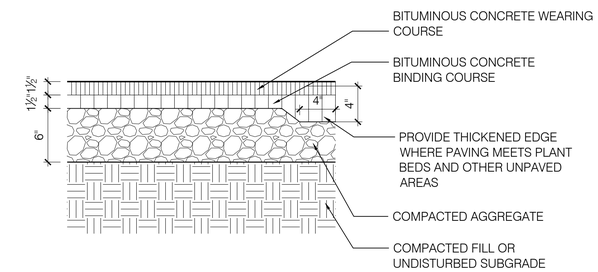

2 PEDESTRIAN BITUMINOUS CONCRETE PAVING

SCALE: 1 1/2" = 1'-0"

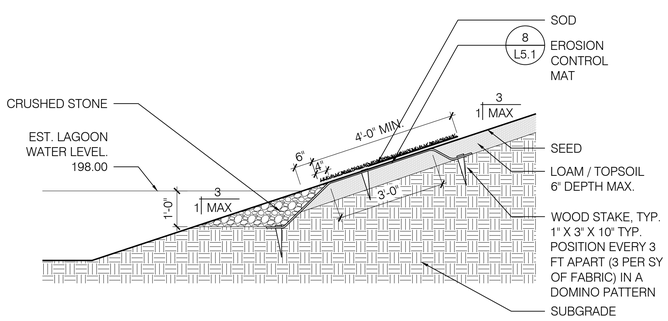

7 SHORELINE RESTORATION - SECTION DETAIL

SCALE: 1/2" = 1'-0"

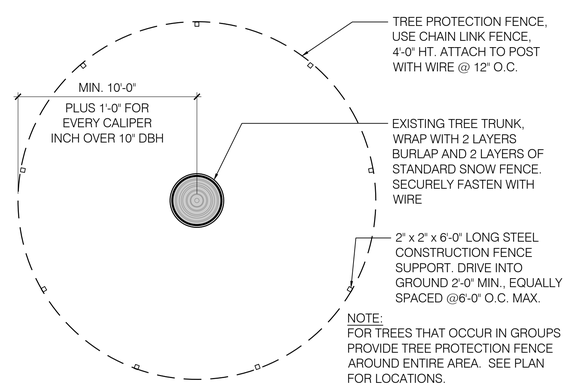

NOTE:
FOR TREES THAT OCCUR IN GROUPS PROVIDE TREE PROTECTION FENCE AROUND ENTIRE AREA. SEE PLAN FOR LOCATIONS.

4 EXISTING TREE PROTECTION - PLAN VIEW

SCALE: 1/4" = 1'-0"

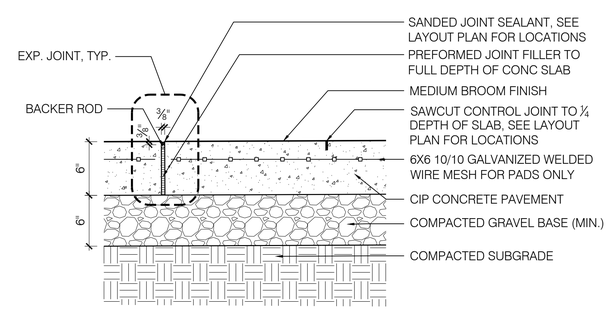

1 CIP CONCRETE PAVING

SCALE: 1 1/2" = 1'-0"

kmdg
KLOPFER MARTIN DESIGN GROUP

69 CANAL STREET | 2ND FLOOR
BOSTON, MA 02114
t: 617.227.2560
info@klopfermartin.com

CLIENT:

TOWN OF BROOKLINE
333 WASHINGTON STREET
BROOKLINE, MA 02445

REVISIONS:

REV	DATE	NOTE

PROJECT:

LARZ LAGOON STRUCTURES
PROJECT # 1811
BROOKLINE, MA 02445

DRAWING:

PAVING AND PLANTING DETAILS

BID SET

DRAWN: EB
REVIEW: KP

SCALE: AS NOTED

DATE: JULY 6, 2020

SHEET:

L5.1

NOTES:
1. DISTANCE BETWEEN ALL POSTS TO BE 6'-1½" AS INDICATED (GUARDRAIL MODULE, TYP.), EXCLUDING FINAL SEGMENTS AT BOTH ENDS. DISTANCE BETWEEN POSTS AT FINAL SEGMENTS TO BE 2'-8¼" AS INDICATED.
2. CAD MODEL TO BE PROVIDED BY LANDSCAPE ARCHITECT FOR SCROLL PATTERN

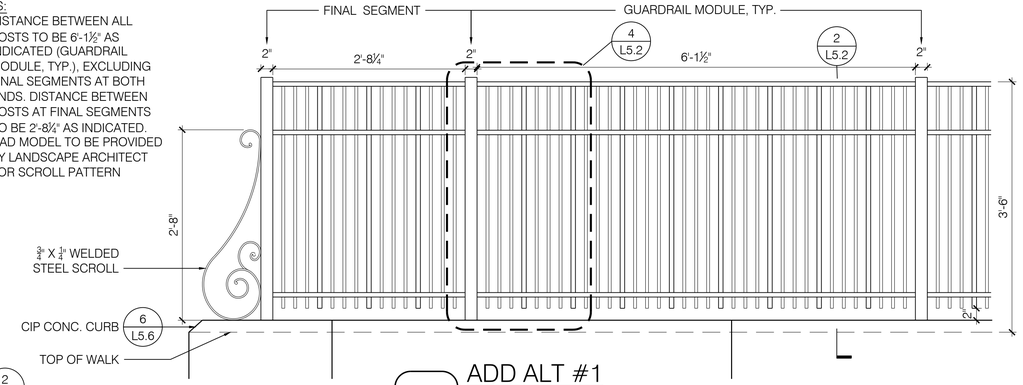

3 ADD ALT #1
CAUSEWAY GUARDRAIL TYPE A - MODULE DETAIL
SCALE: 1" = 1'-0"

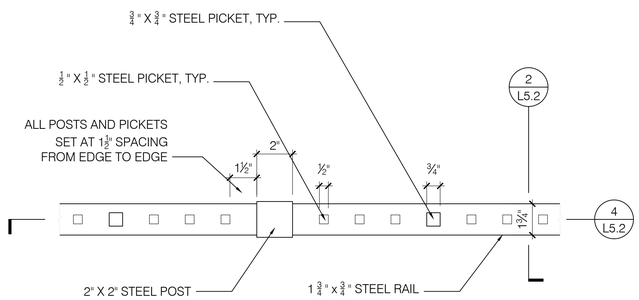

5 GUARDRAIL TYPE A PLAN DETAIL
SCALE: 3" = 1'-0"

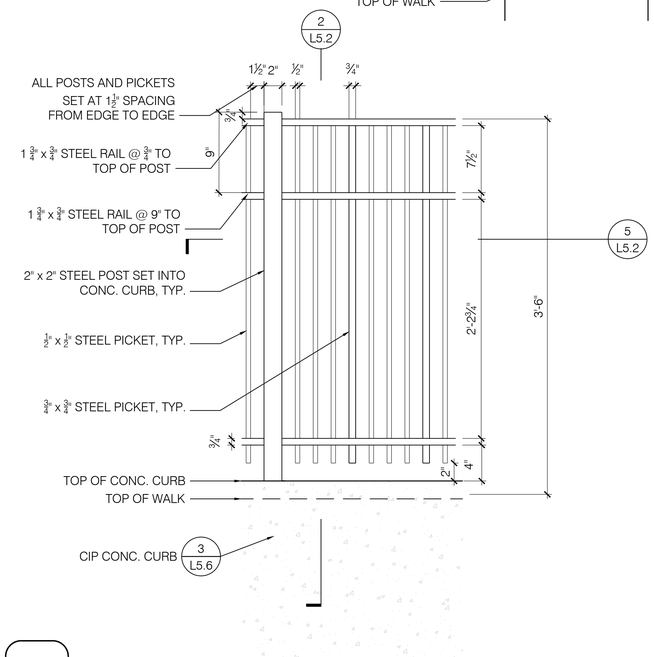

4 GUARDRAIL TYPE A SECTION DETAIL
SCALE: 1 1/2" = 1'-0"

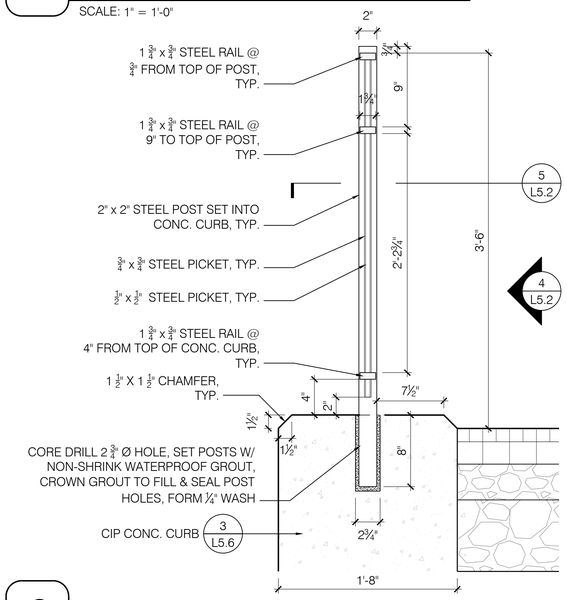

2 GUARDRAIL TYPE A - CROSS-SECTION DETAIL
SCALE: 1 1/2" = 1'-0"

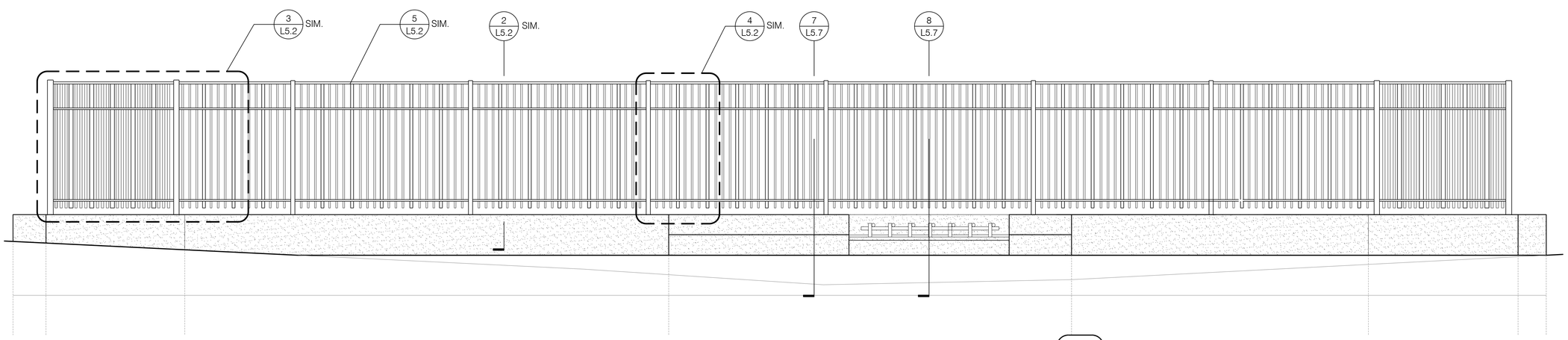

1 WEIR GURARDRAIL TYPE A ELEVATION
SCALE: 3/4" = 1'-0"

kmdg KLOPFER MARTIN DESIGN GROUP
69 CANAL STREET | 2ND FLOOR
BOSTON, MA 02114
t: 617.227.2560
info@klopfermartin.com

CLIENT:
TOWN OF BROOKLINE
333 WASHINGTON STREET
BROOKLINE, MA 02445

REVISIONS:

REV	DATE	NOTE

PROJECT:
LARZ LAGOON STRUCTURES
PROJECT # 1811
BROOKLINE, MA 02445

DRAWING:
CAUSEWAY AND WEIR RAILING DETAILS

BID SET

DRAWN: EB
REVIEW: KP

SCALE: AS NOTED

DATE: JULY 6, 2020

SHEET:
L5.2

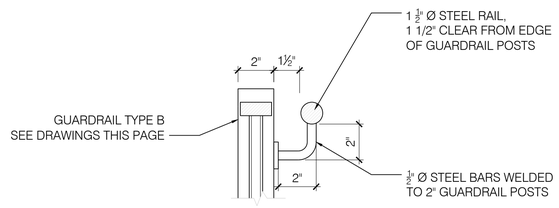

4 HANDRAIL AT BRIDGE GUARDRAIL TYPE B

SCALE: 3" = 1'-0"

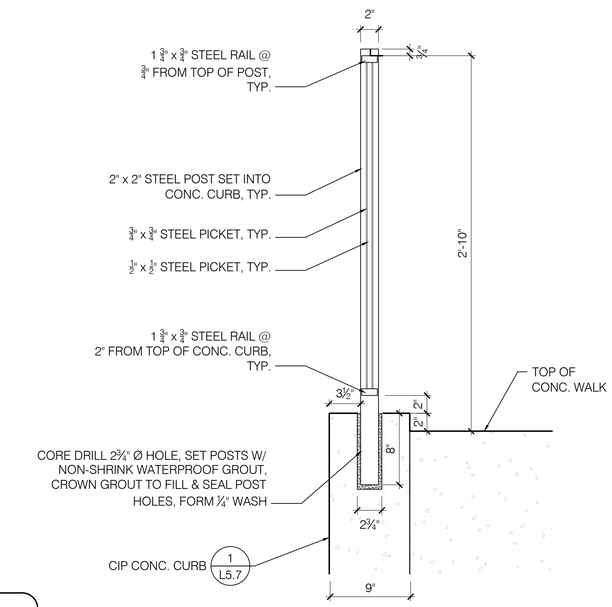

2 GUARDRAIL TYPE B - CROSS-SECTION DETAIL

SCALE: 1 1/2" = 1'-0"

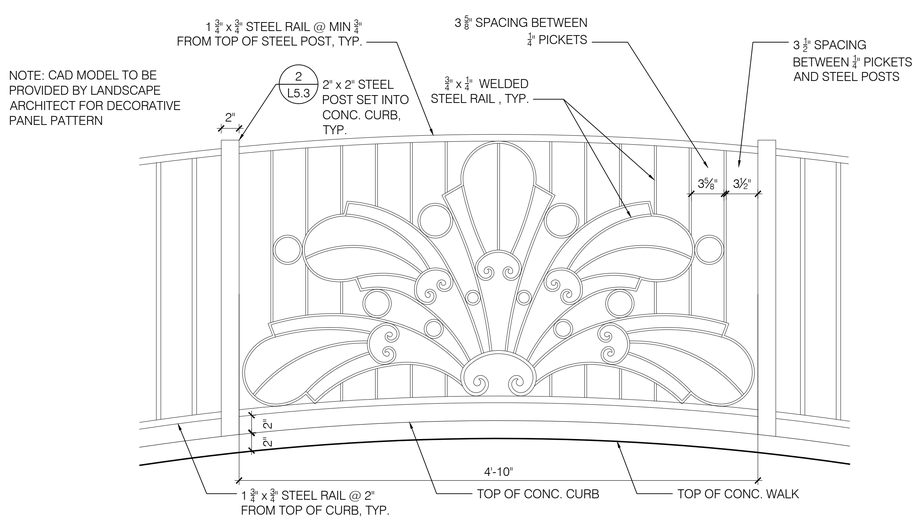

3 GUARDRAIL TYPE B - DECORATIVE PANEL DETAIL

SCALE: 1 1/2" = 1'-0"

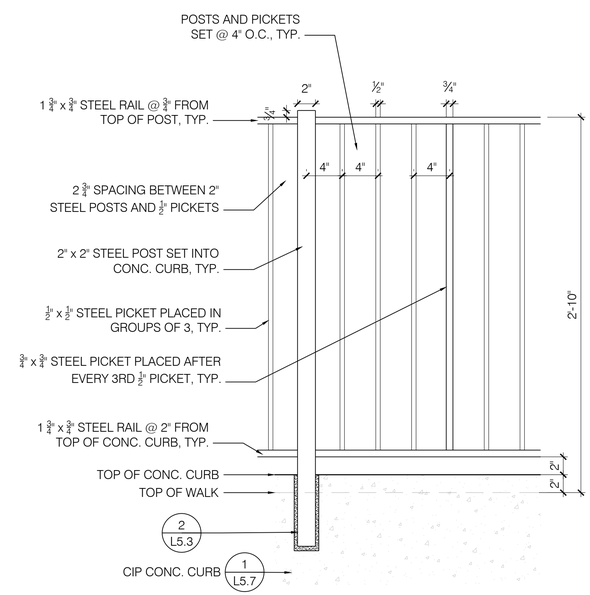

1 GUARDRAIL TYPE B - SECTION DETAIL

SCALE: 1 1/2" = 1'-0"

kmdg
KLOPFER MARTIN DESIGN GROUP

69 CANAL STREET | 2ND FLOOR
BOSTON, MA 02114
t: 617.227.2560
info@klopfermartin.com

CLIENT:

TOWN OF BROOKLINE
333 WASHINGTON STREET
BROOKLINE, MA 02445

REVISIONS:

REV	DATE	NOTE

PROJECT:

LARZ LAGOON STRUCTURES
PROJECT # 1811
BROOKLINE, MA 02445

DRAWING:

BRIDGE RAILING DETAILS

BID SET

DRAWN: EB
REVIEW: KP

SCALE: AS NOTED

DATE: JULY 6, 2020

SHEET:

L5.3

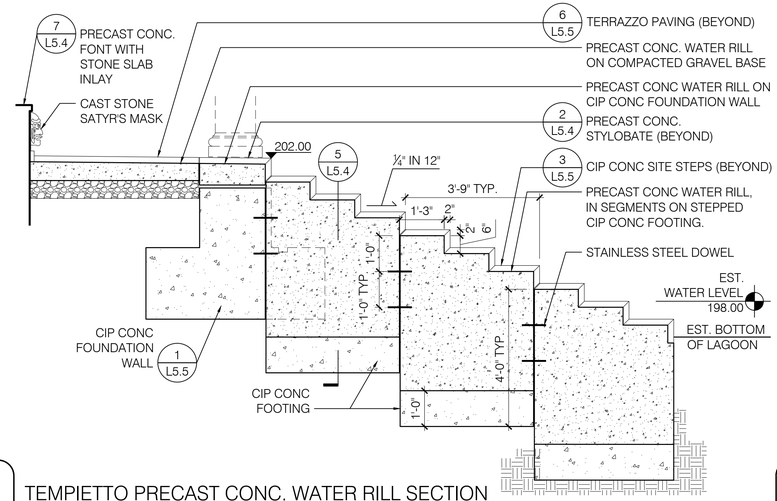

6 TEMPIETTO PRECAST CONC. WATER RILL SECTION

SCALE: 1/2" = 1'-0"

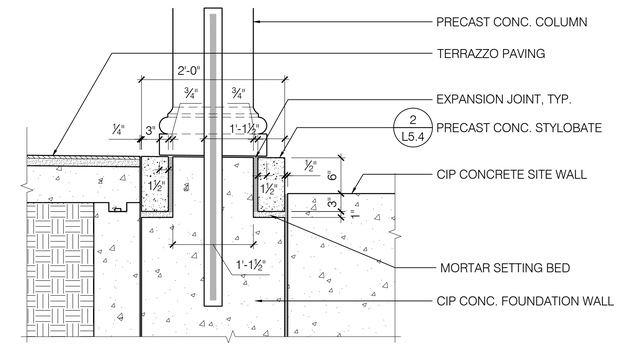

3 TEMPIETTO STYLOBATE AT SITE WALL

SCALE: 1" = 1'-0"

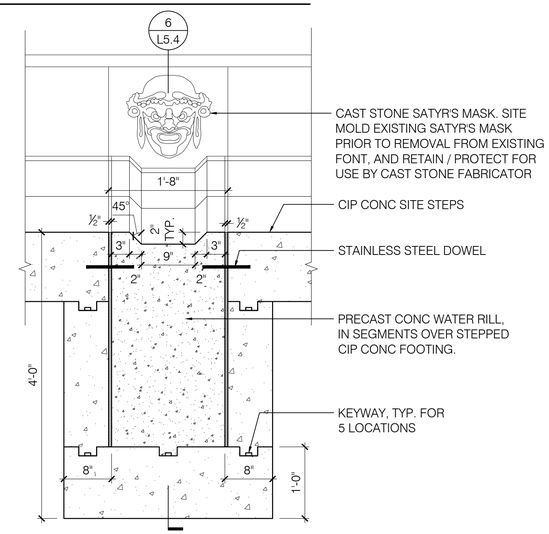

5 TEMPIETTO PRECAST CONC WATER RILL CROSS SECTION

SCALE: 1" = 1'-0"

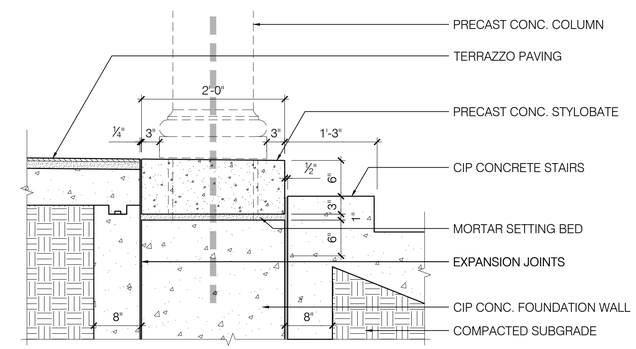

2 TEMPIETTO STYLOBATE AT SITE STEPS

SCALE: 1" = 1'-0"

ADD ALT #2

FONT WATER FEATURE. DRAINS TO BE PART OF BASE BID. WATER FEATURE NOZZLE, SUPPLY, AND RELATED EQUIP. TO BE ADD ALT #2. SEE SHEETS WF-1 TO WF-4 FOR WATER FEATURE EQUIPMENT DWGS

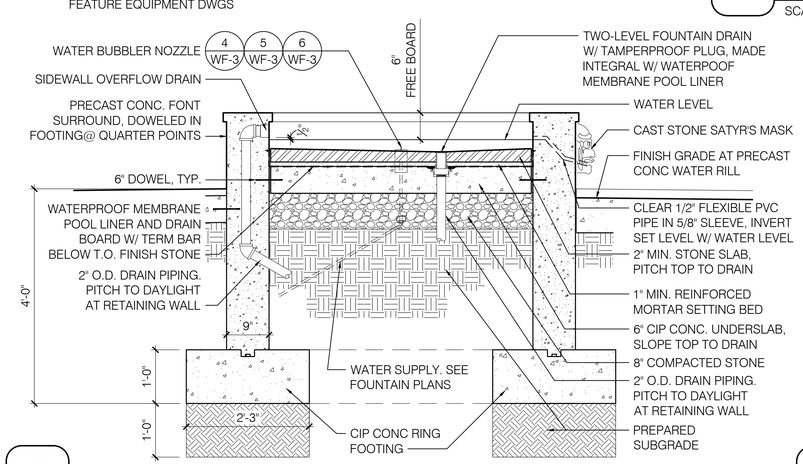

7 TEMPIETTO FONT BASIN

SCALE: 3/4" = 1'-0"

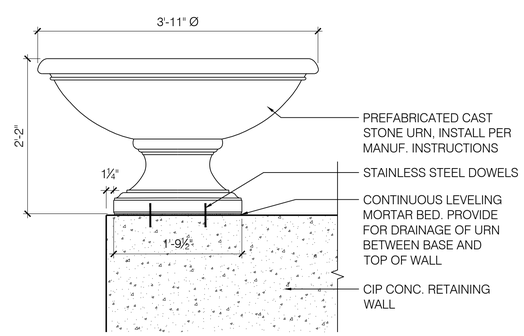

4 PREFABRICATED CAST STONE URN

SCALE: 1" = 1'-0"

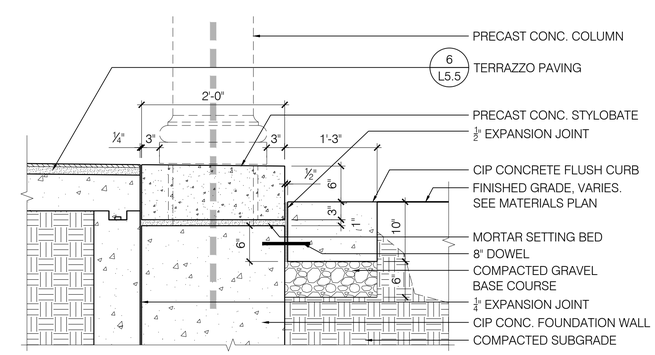

1 TEMPIETTO STYLOBATE AT FLUSH CURB

SCALE: 1" = 1'-0"

kmdg
KLOPFER MARTIN DESIGN GROUP

69 CANAL STREET | 2ND FLOOR
BOSTON, MA 02114
t: 617.227.2560
info@klopfermartin.com

CLIENT:

TOWN OF BROOKLINE
333 WASHINGTON STREET
BROOKLINE, MA 02445

REVISIONS:

REV	DATE	NOTE

PROJECT:

LARZ LAGOON STRUCTURES
PROJECT # 1811
BROOKLINE, MA 02445

DRAWING:

PRECAST CONCRETE & CAST STONE DETAILS

BID SET

DRAWN: EB
REVIEW: KP

SCALE: AS NOTED

DATE: JULY 6, 2020

SHEET:

L5.4

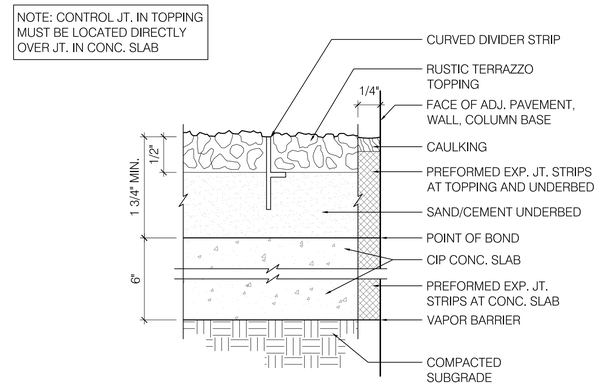

6 TERRAZZO FLOORING

SCALE: 1" = 1'-0"

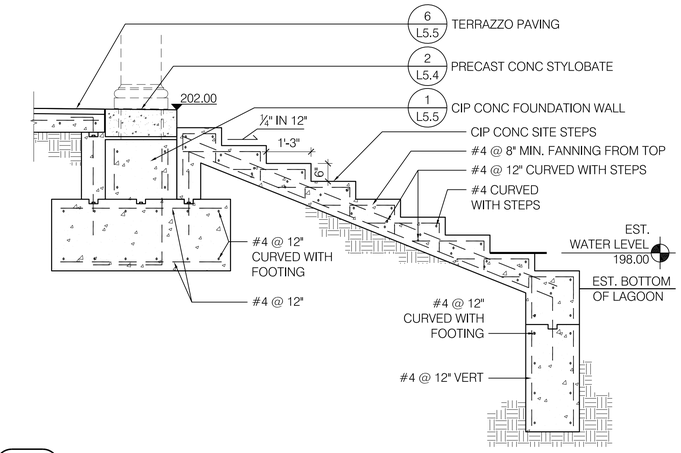

3 TEMPIETTO SITE STEPS SECTION

SCALE: 1/2" = 1'-0"

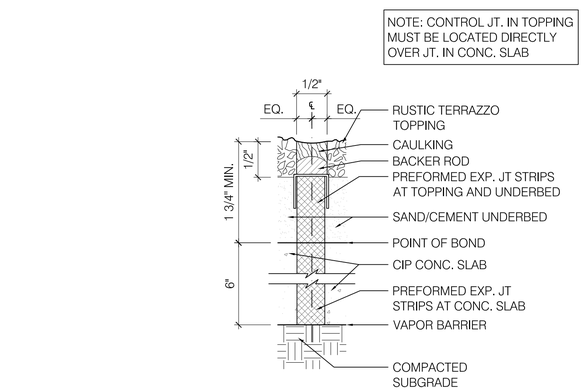

5 TERRAZZO FLOORING AT CONC. SLAB JOINTS

SCALE: 1" = 1'-0"

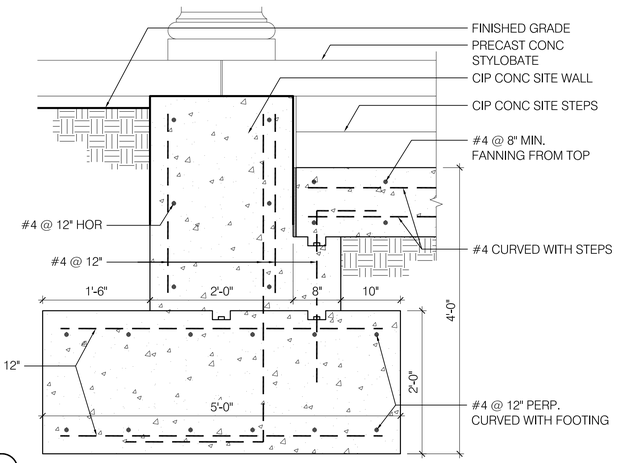

2 TEMPIETTO CIP CONC SITE WALL

SCALE: 1" = 1'-0"

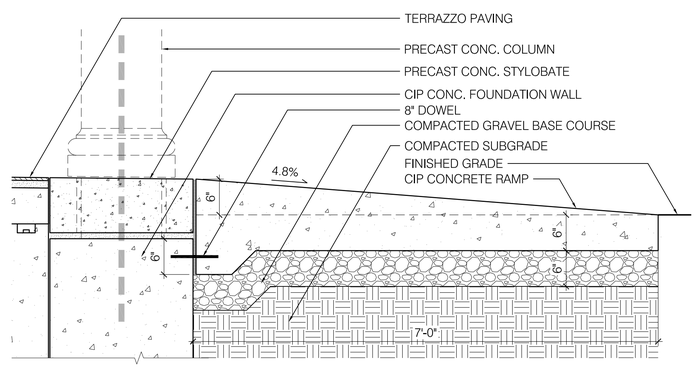

4 TEMPIETTO CIP CONC RAMP

SCALE: 1" = 1'-0"

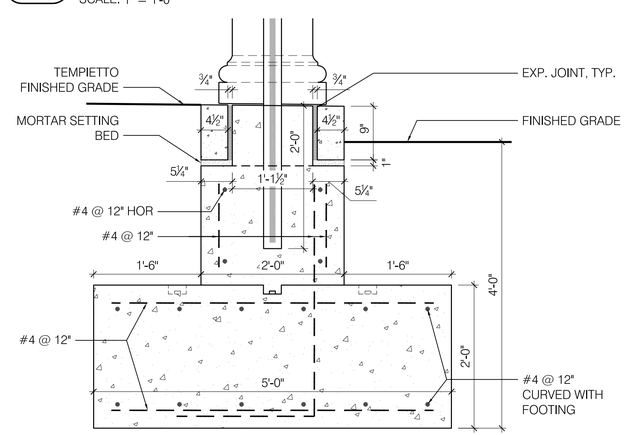

1 TEMPIETTO FOUNDATION WALL

SCALE: 1" = 1'-0"

kmdg
KLOPFER MARTIN DESIGN GROUP

69 CANAL STREET | 2ND FLOOR
BOSTON, MA 02114
t: 617.227.2560
info@klopfermartin.com

CLIENT:

TOWN OF BROOKLINE
333 WASHINGTON STREET
BROOKLINE, MA 02445

REVISIONS:

REV	DATE	NOTE

PROJECT:

LARZ LAGOON STRUCTURES
PROJECT # 1811
BROOKLINE, MA 02445

DRAWING:

CIP CONCRETE DETAILS - 1

BID SET

DRAWN: EB
REVIEW: KP

SCALE: AS NOTED

DATE: JULY 6, 2020

SHEET:

L5.5

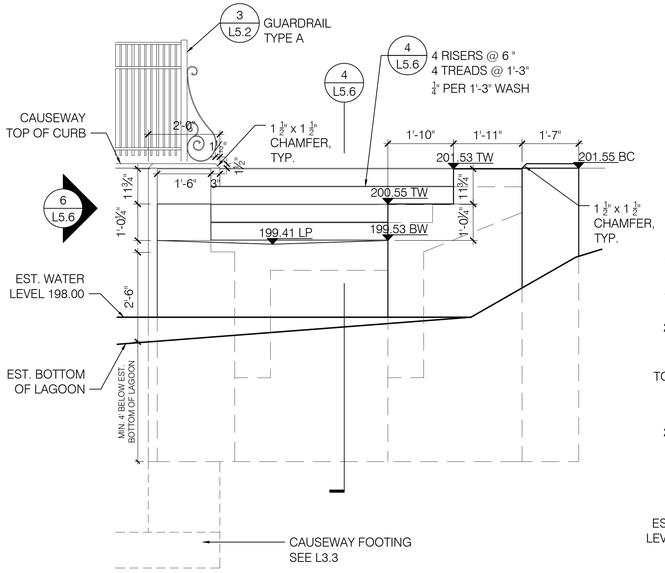

7 ADD ALT #1
CONCRETE-CHEEK WALL ELEVATION B
SCALE: 1/2" = 1'-0"

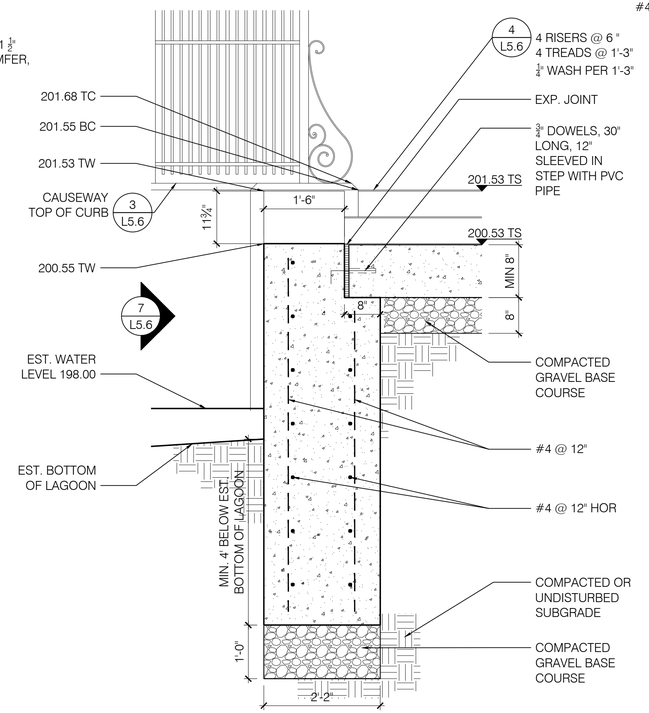

5 ADD ALT #1
CONCRETE CHEEK WALL
SCALE: 3/4" = 1'-0"

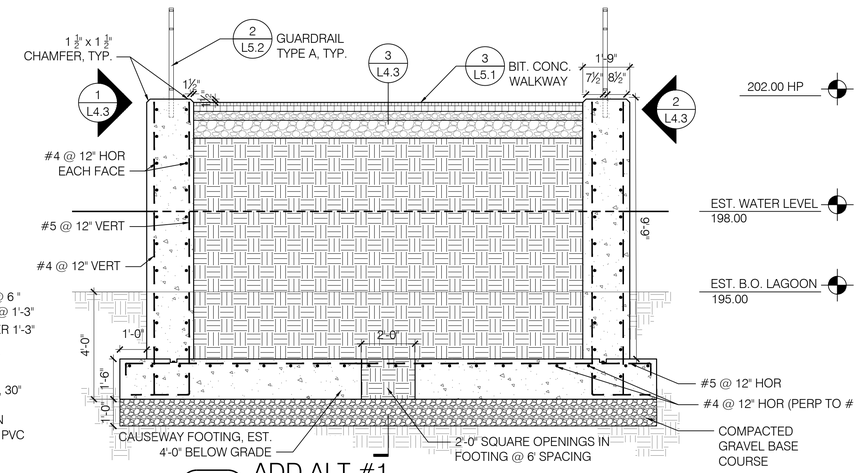

3 ADD ALT #1
CAUSEWAY CROSS SECTION
SCALE: 3/8" = 1'-0"

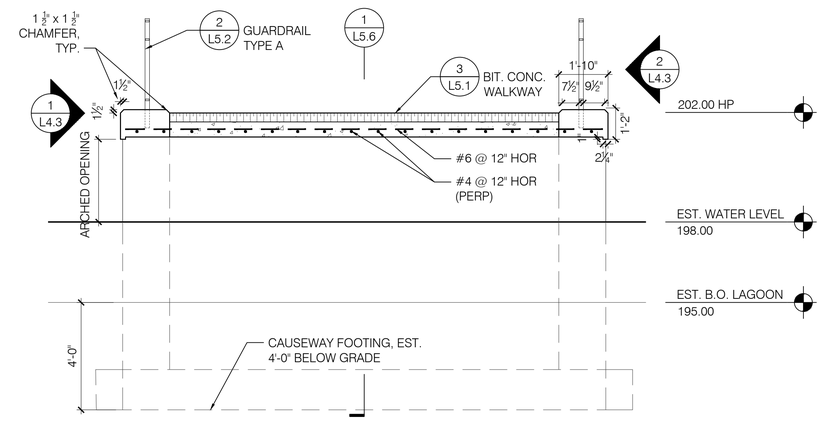

2 ADD ALT #1
CAUSEWAY CROSS SECTION THROUGH ARCH
SCALE: 3/8" = 1'-0"

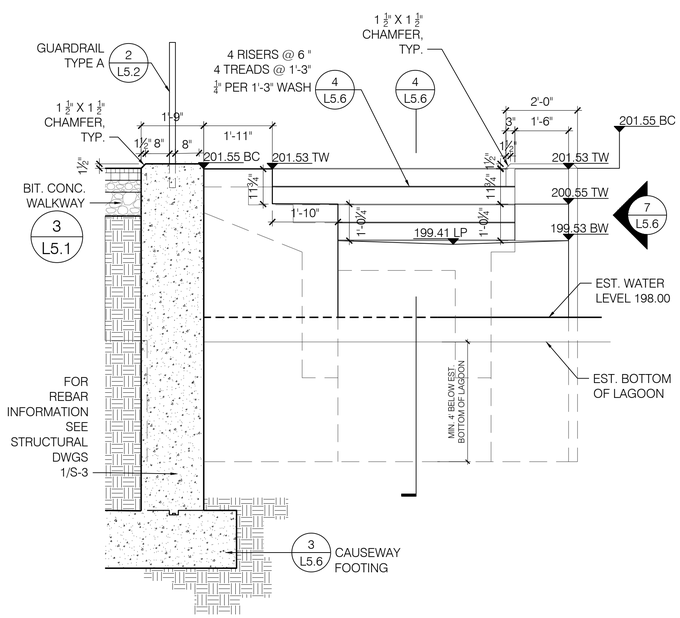

6 ADD ALT #1
CONCRETE-CHEEK WALL ELEVATION A
SCALE: 1/2" = 1'-0"

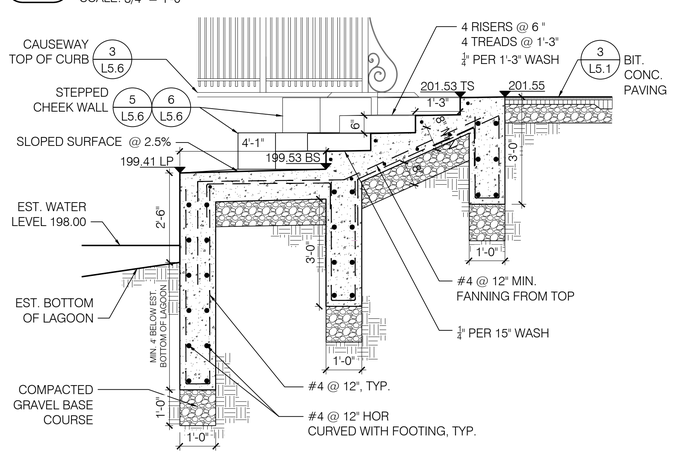

4 ADD ALT #1
CONCRETE STEPS
SCALE: 1/2" = 1'-0"

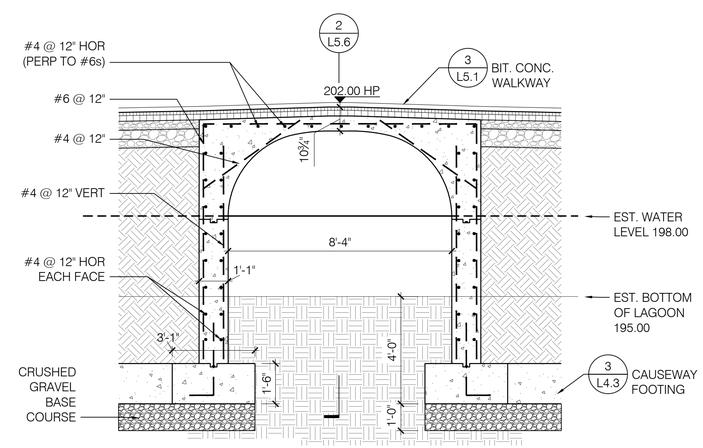

1 ADD ALT #1
CAUSEWAY SECTION THROUGH ARCH
SCALE: 3/8" = 1'-0"

kmdg KLOPFER MARTIN DESIGN GROUP
69 CANAL STREET | 2ND FLOOR
BOSTON, MA 02114
t: 617.227.2560
info@klopfermartin.com

CLIENT:

TOWN OF BROOKLINE
333 WASHINGTON STREET
BROOKLINE, MA 02445

REVISIONS:

REV	DATE	NOTE

PROJECT:

LARZ LAGOON STRUCTURES
PROJECT # 1811
BROOKLINE, MA 02445

DRAWING:

CIP CONCRETE DETAILS - 2

BID SET

DRAWN: EB
REVIEW: KP

SCALE: AS NOTED

DATE: JULY 6, 2020

SHEET:

L5.6

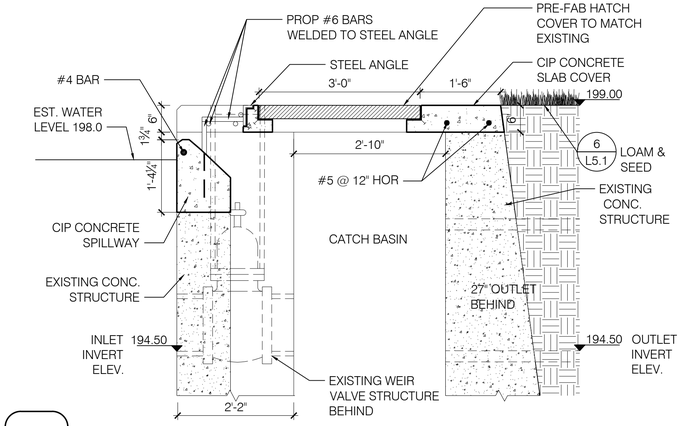

8 WEIR SECTION

SCALE: 3/4" = 1'-0"

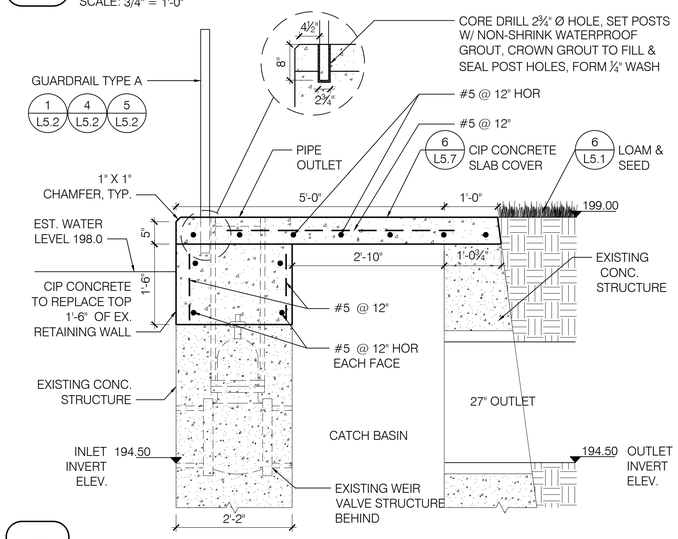

7 WEIR RETAINING WALL SECTION

SCALE: 3/4" = 1'-0"

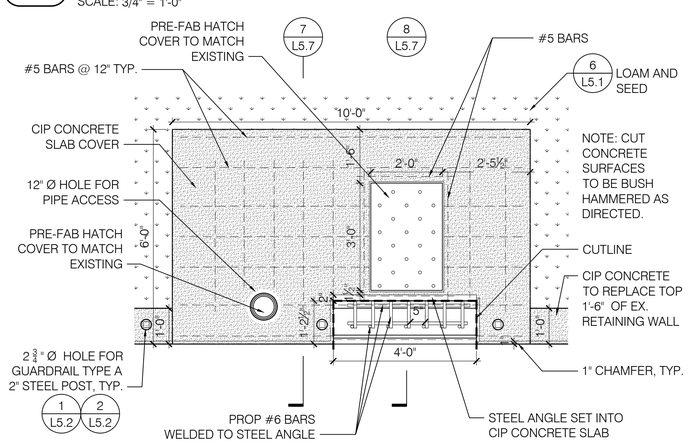

6 WEIR HATCH PLAN

SCALE: 1/2" = 1'-0"

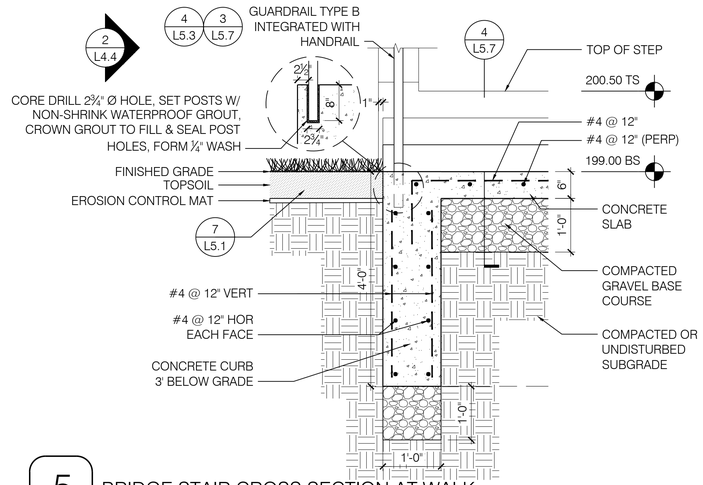

5 BRIDGE STAIR CROSS SECTION AT WALK

SCALE: 3/4" = 1'-0"

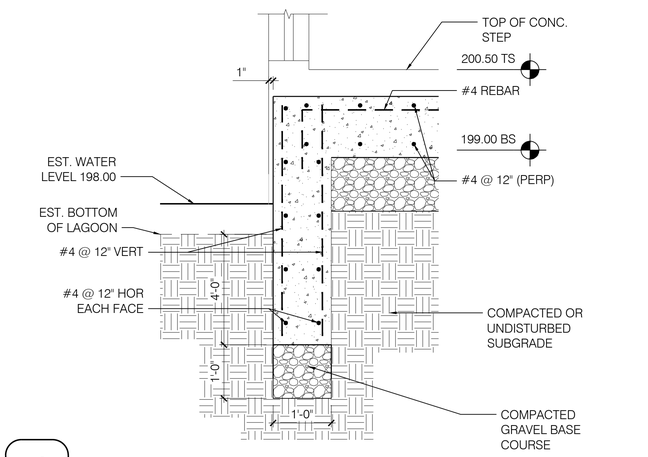

4 BRIDGE STAIR SECTION

SCALE: 3/4" = 1'-0"

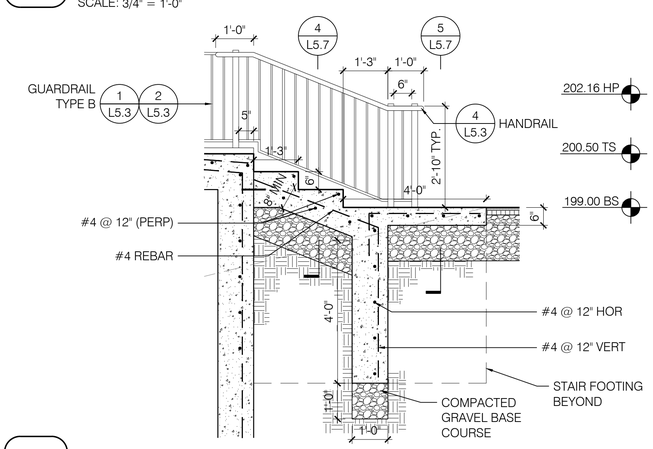

3 BRIDGE CIP CONCRETE STEPS

SCALE: 1/2" = 1'-0"

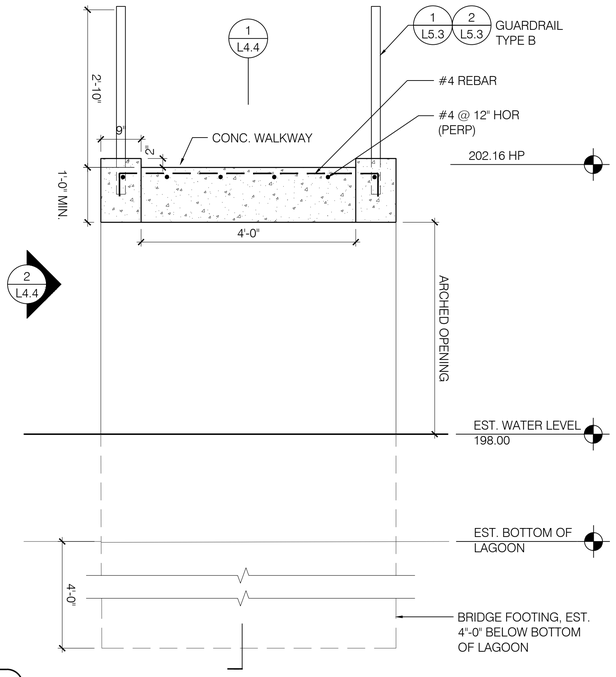

2 BRIDGE CROSS SECTION THROUGH ARCH

SCALE: 3/4" = 1'-0"

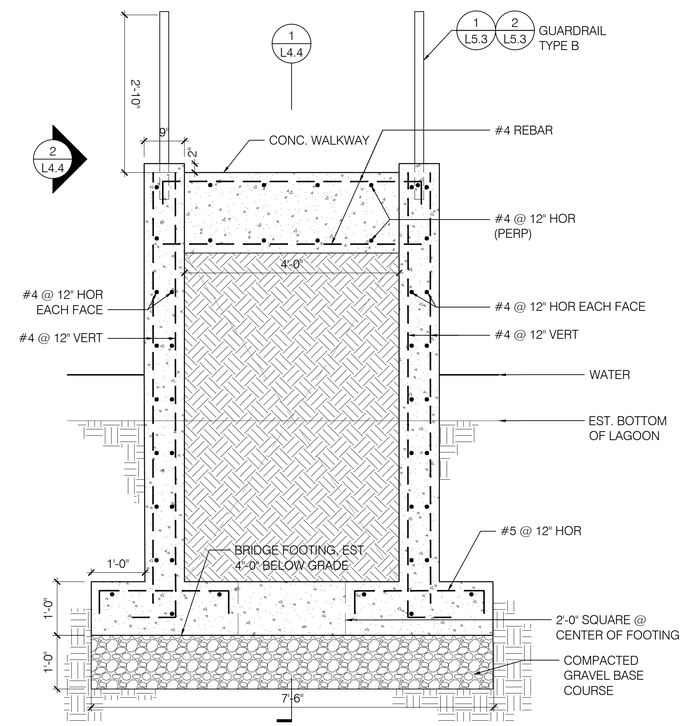

1 BRIDGE CROSS SECTION

SCALE: 3/4" = 1'-0"

kmdg KLOPFER MARTIN DESIGN GROUP

69 CANAL STREET | 2ND FLOOR
BOSTON, MA 02114
t: 617.227.2560
info@klopfermartin.com

CLIENT:

TOWN OF BROOKLINE
333 WASHINGTON STREET
BROOKLINE, MA 02445

REVISIONS:

REV	DATE	NOTE

PROJECT:

LARZ LAGOON STRUCTURES
PROJECT # 1811
BROOKLINE, MA 02445

DRAWING:

CIP CONCRETE DETAILS - 3

BID SET

DRAWN: EB
REVIEW: KP

SCALE: AS NOTED

DATE: JULY 6, 2020

SHEET:

L5.7

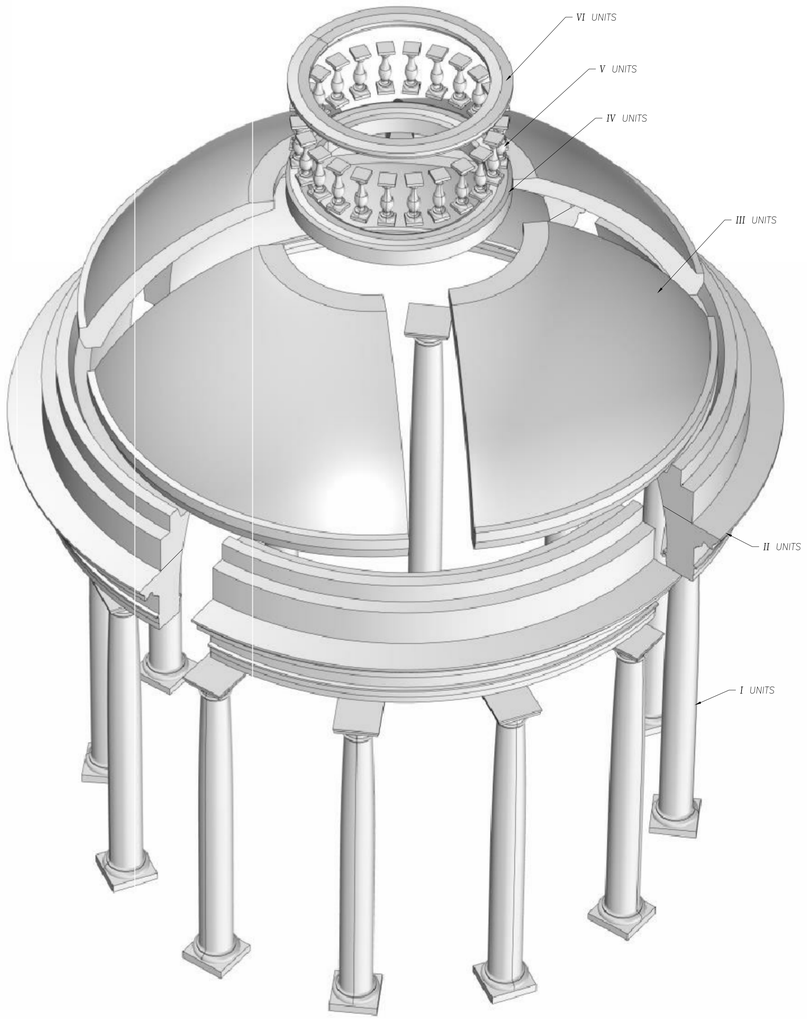

EXPLODED VIEW
NTS

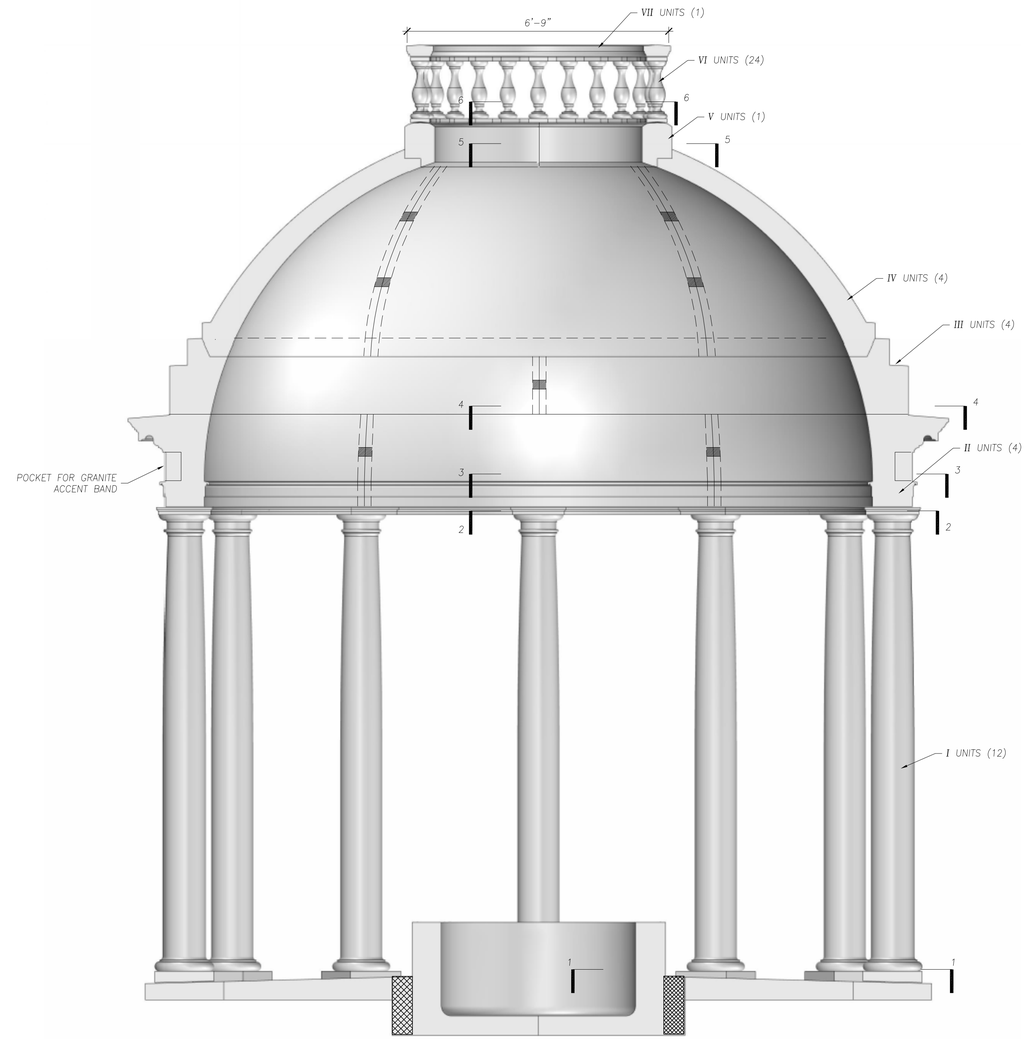

VERTICAL SECTION
NTS

NOTE: A THREE-DIMENSIONAL MODEL INCLUDING OVERALL DATA WILL BE PROVIDED TO THE FABRICATOR. HOWEVER, THE FABRICATOR SHALL MAKE HIS OR HER OWN MODEL FOR FABRICATION OF THE CAST STONE UNITS AND SHALL BE SOLELY RESPONSIBLE FOR UNIT FIT-UP, DIMENSIONAL STABILITY, AND GEOMETRIC CONFORMITY TO EXISTING STRUCTURE.

kmdg
KLOPFER MARTIN DESIGN GROUP
69 CANAL STREET | 2ND FLOOR
BOSTON, MA 02114
t: 617.227.2560
info@klopfermartin.com

CLIENT:

TOWN OF BROOKLINE
333 WASHINGTON STREET
BROOKLINE, MA 02445

Structures North
CONSULTING ENGINEERS, INC.
60 Washington St., Suite 401
Salem, MA. 01970-3517
T 978.745.6817 I F 978.745.6067
www.structures-north.com

REVISIONS:

REV DATE NOTE

PROJECT:

LARZ LAGOON STRUCTURES
PROJECT # 1811
BROOKLINE, MA 02445

DRAWING:

TEMPIETTO - SECTIONS

BID SET

DRAWN: SA/SB
REVIEW: JMW

SCALE:

DATE:
JULY 6, 2020

SHEET:

S-1

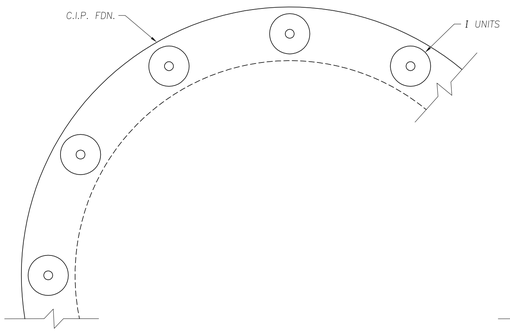

PLAN 1–1
NTS

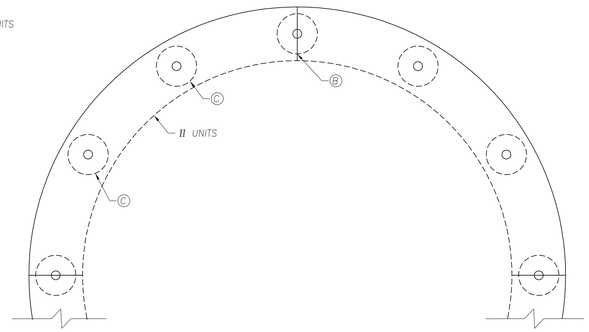

PLAN 2–2
NTS

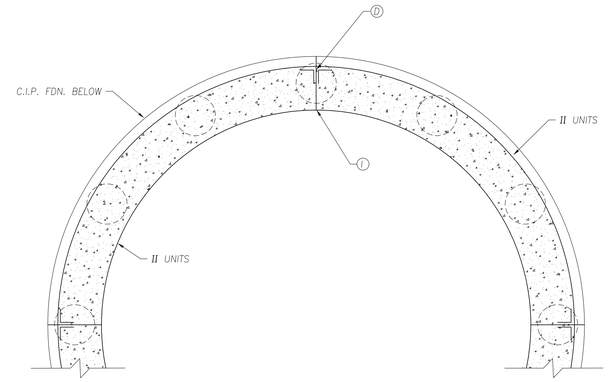

PLAN 3–3
NTS

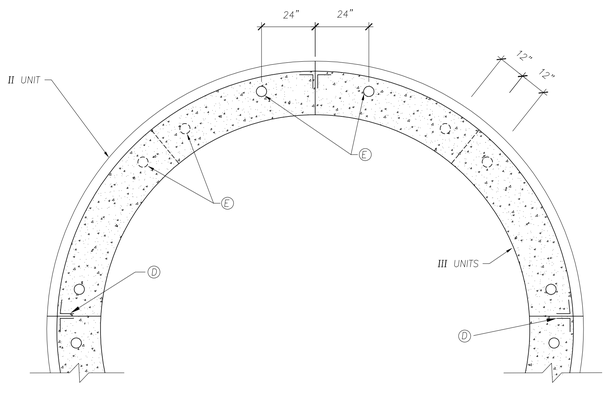

PLAN 4–4
NTS

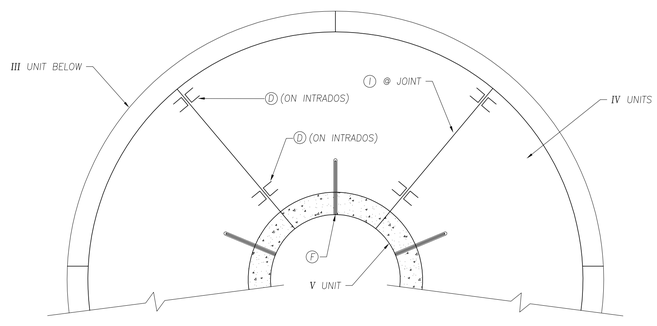

PLAN 5–5
NTS

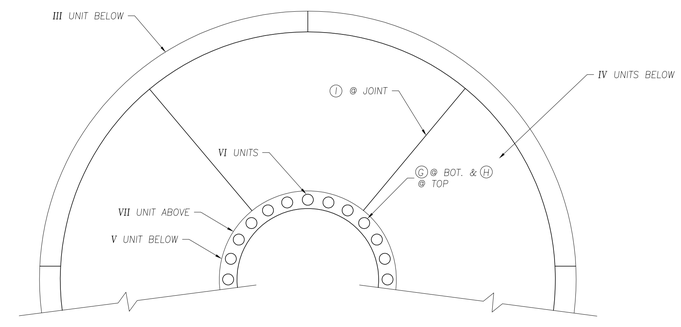

PLAN 6–6
NTS

NOTE: A THREE-DIMENSIONAL MODEL INCLUDING OVERALL DATA WILL BE PROVIDED TO THE FABRICATOR. HOWEVER, THE FABRICATOR SHALL MAKE HIS OR HER OWN MODEL FOR FABRICATION OF THE CAST STONE UNITS AND SHALL BE SOLELY RESPONSIBLE FOR UNIT FIT-UP, DIMENSIONAL STABILITY, AND GEOMETRIC CONFORMITY TO EXISTING STRUCTURE.

kmdg
KLOPFER MARTIN DESIGN GROUP
69 CANAL STREET | 2ND FLOOR
BOSTON, MA 02114
t: 617.227.2560
info@klopfermartin.com

CLIENT:

TOWN OF BROOKLINE
333 WASHINGTON STREET
BROOKLINE, MA 02445

Structures North
CONSULTING ENGINEERS, INC.
60 Washington St., Suite 401
Salem, MA. 01970-3517
T 978.745.6817 I F 978.745.6067
www.structures-north.com

REVISIONS:

REV	DATE	NOTE

PROJECT:

LARZ LAGOON STRUCTURES
PROJECT # 1811
BROOKLINE, MA 02445

DRAWING:

TEMPIETTO - PLANS

BID SET

DRAWN: SA/SB
REVIEW: JMW

SCALE:

DATE:
JULY 6, 2020

SHEET:

S-2

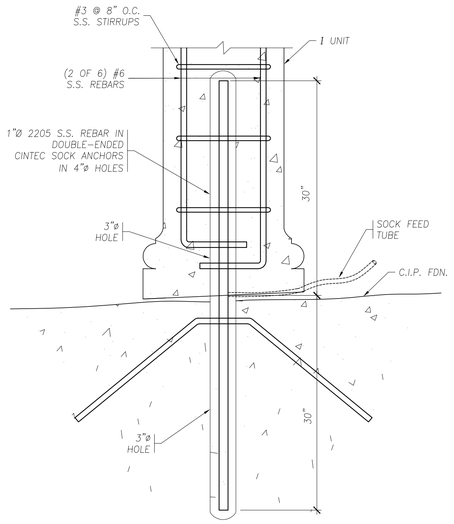

A TYPE CONN'N
1½" = 1'-0"

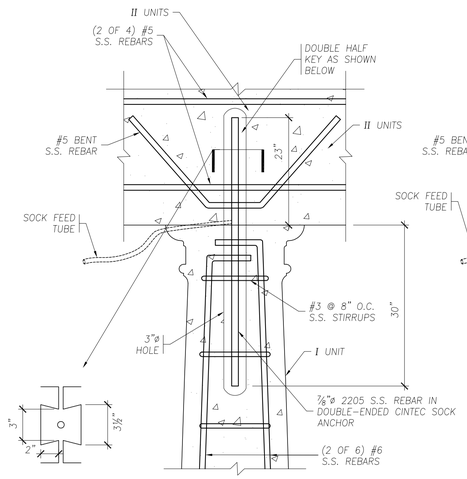

B TYPE CONN'N
1½" = 1'-0"

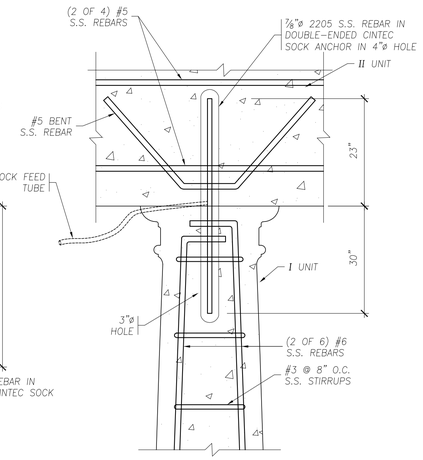

C TYPE CONN'N
1½" = 1'-0"

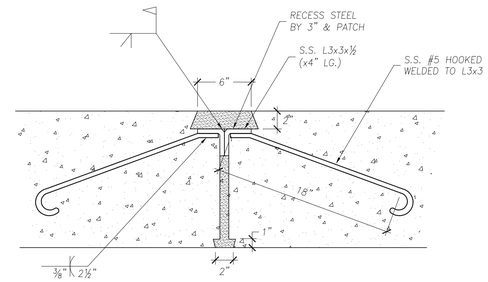

D TYPE CONN'N
1½" = 1'-0"

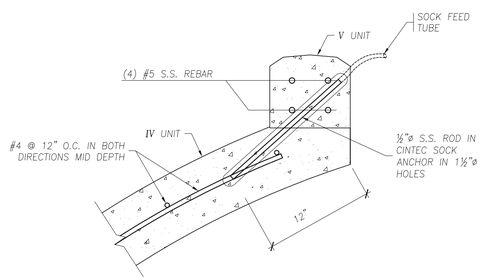

F TYPE CONN'N
1½" = 1'-0"

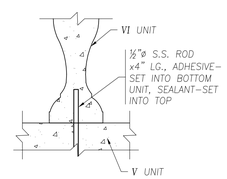

G TYPE CONN'N
1½" = 1'-0"

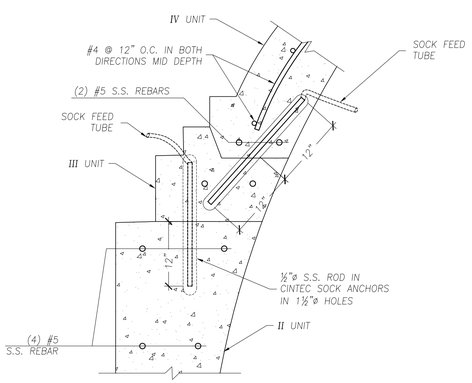

E TYPE CONN'N
1½" = 1'-0"

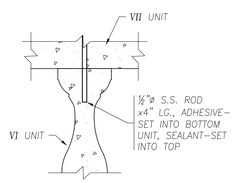

H TYPE CONN'N
1½" = 1'-0"

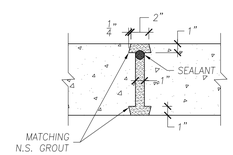

I TYPE JOINT CONN'N
1½" = 1'-0"

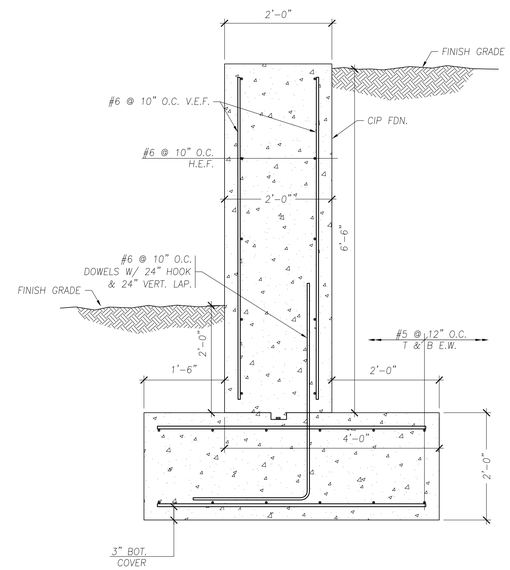

RETAINING WALL SECTION
¾" = 1'-0"

NOTE: A THREE-DIMENSIONAL MODEL INCLUDING OVERALL DATA WILL BE PROVIDED TO THE FABRICATOR. HOWEVER, THE FABRICATOR SHALL MAKE HIS OR HER OWN MODEL FOR FABRICATION OF THE CAST STONE UNITS AND SHALL BE SOLELY RESPONSIBLE FOR UNIT FIT-UP, DIMENSIONAL STABILITY, AND GEOMETRIC CONFORMITY TO EXISTING STRUCTURE.

kmdg
KLOPFER MARTIN DESIGN GROUP

69 CANAL STREET | 2ND FLOOR
BOSTON, MA 02114
t: 617.227.2560
info@klopfermartin.com

CLIENT:

TOWN OF BROOKLINE
333 WASHINGTON STREET
BROOKLINE, MA 02445

Structures North
CONSULTING ENGINEERS, INC.

60 Washington St., Suite 401
Salem, MA. 01970-3517
T 978.745.6817 I F 978.745.6067
www.structures-north.com

REVISIONS:

REV	DATE	NOTE

PROJECT:

LARZ LAGOON STRUCTURES
PROJECT # 1811
BROOKLINE, MA 02445

DRAWING:

TEMPIETTO - DETAILS

BID SET

DRAWN: SA/SB
REVIEW: JMW

SCALE:

DATE:
JULY 6, 2020

SHEET:

S-3

ADD ALTERNATE #2

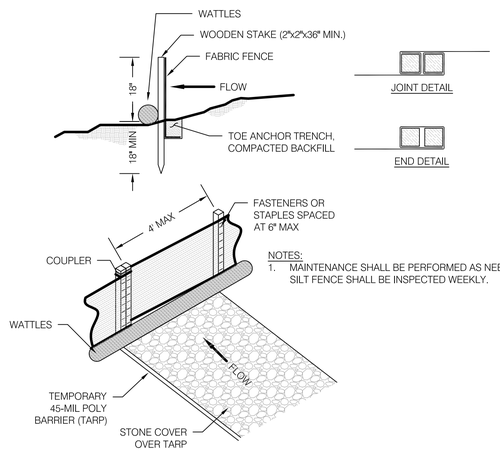

NOTES:
1. MAINTENANCE SHALL BE PERFORMED AS NEEDED. SILT FENCE SHALL BE INSPECTED WEEKLY.

1 EROSION CONTROL PLAN
NOT TO SCALE

ADD ALTERNATE #2: CONTROL SUBMERSIBLE PUMP IN MANHOLE
ADD ALTERNATE #3: CONTROL WELL PUMP

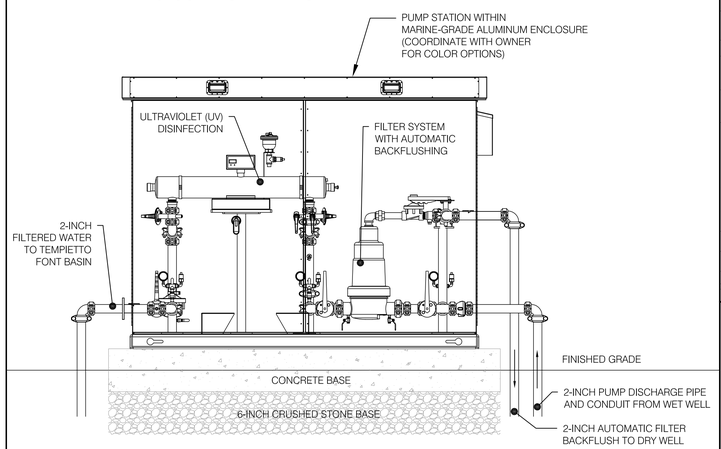

2 SAMPLE PUMP STATION DETAIL
NOT TO SCALE

WATER FEATURE DESIGN BY:

Aqueous

AQUEOUS CONSULTANTS, LLC
2 Dundee Park Drive, Suite 301B
Andover, MA 01810
(978) 470-1695
www.aqueous.net

NOTE: ALL WATER FEATURE SCOPES TO BE ADD ALTERNATE #2 EXCEPT WHERE NOTED (FONT BASIN DRAINS, ETC.).
WELL DRILLING AND PUMP SYSTEM SHALL BE PRICED UNDER ADD ALTERNATE #3

ADD ALTERNATE #2
EXCEPT WHERE NOTED

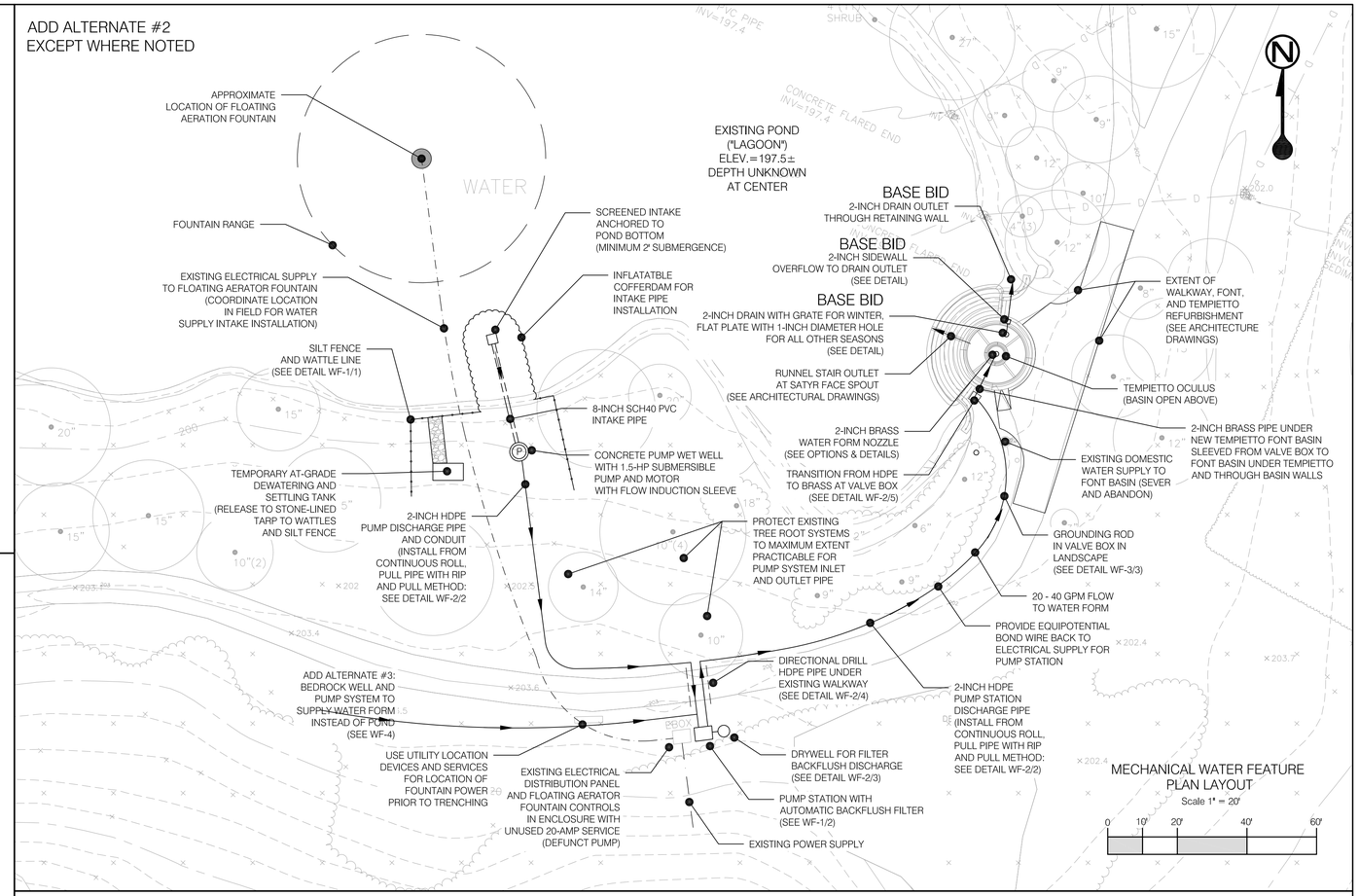

MECHANICAL WATER FEATURE PLAN LAYOUT
Scale 1" = 20'
0 10' 20' 40' 60'

ADD ALTERNATE #2

POND INTAKE SYSTEM PROFILE PLAN LAYOUT
Scale 1" = 3'
0 1.5' 3' 6' 9'

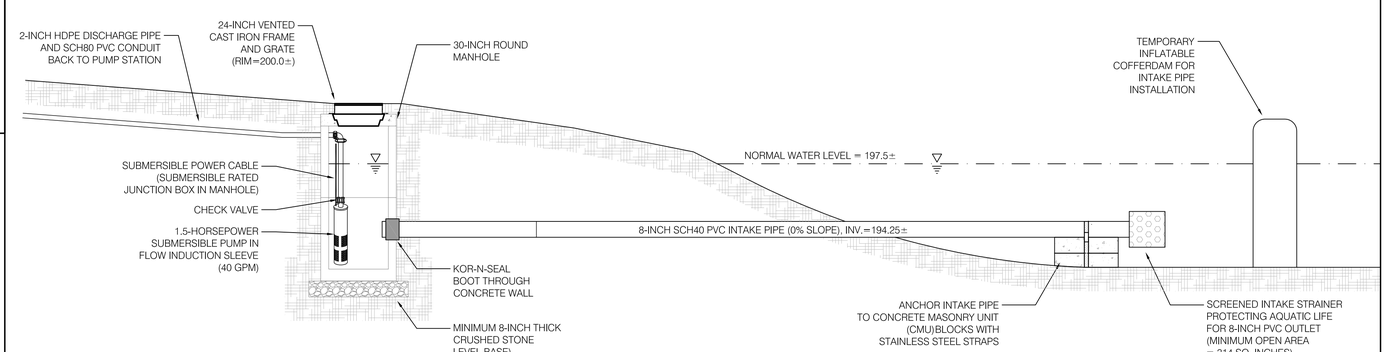

kmdg
KLOPFER MARTIN DESIGN GROUP

69 CANAL STREET | 2ND FLOOR
BOSTON, MA 02114
t: 617.227.2560
info@klopfermartin.com

CLIENT:

TOWN OF BROOKLINE
333 WASHINGTON STREET
BROOKLINE, MA 02445

COMMONWEALTH OF MASSACHUSETTS
MICHAEL GOO
CIVIL
No. 46496
REGISTERED PROFESSIONAL ENGINEER

JULY 6, 2020

REVISIONS:

REV	DATE	NOTE

PROJECT:

LARZ LAGOON STRUCTURES
PROJECT # 1811
BROOKLINE, MA 02445

DRAWING:

MECHANICAL WATER FEATURE PLAN LAYOUT

BID SET

DRAWN: REVIEW:

SCALE:

DATE:
JULY 6, 2020

SHEET:

WF-1

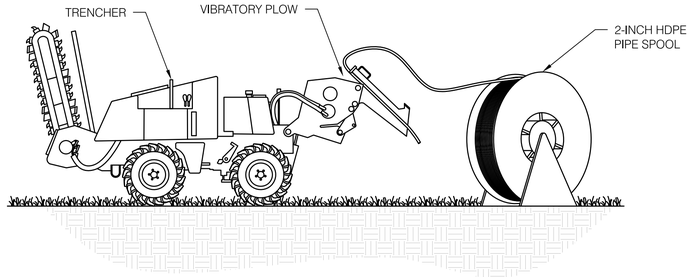

ELEVATION

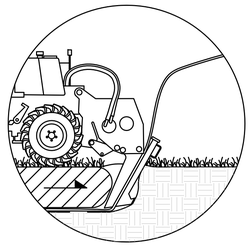

TRENCH ELEVATION

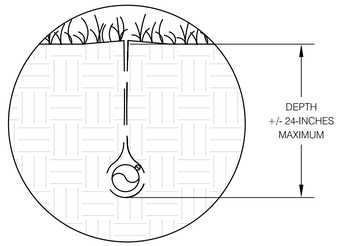

PIPE TRENCH SECTION

ADD ALTERNATE #2

1 VIBRATORY PLOW PIPE INSTALLATION
NOT TO SCALE

NOTE:
PRIOR TO INSTALLATION, DIG NON-INVASIVE TEST PITS OR MAKE SOIL SAMPLES AROUND CRITICAL TREES TO DETERMINE EXTENT OF EXISTING ROOT SYSTEMS TO MOVE PROPOSED TRENCH OR HAND DIG.

TYPICAL IPS PE3608 PIPE DIMENSIONS - DR13.5 (128 PSI)					
NOMINAL PIPE DIAMETER	ACTUAL OUTSIDE DIAMETER	MINIMUM WALL THICKNESS	AVERAGE INSIDE DIAMETER	WEIGHT (LBS. / FOOT)	MELT BEAD SIZE
2"	2.375"	0.176"	2.002"	0.534	1/16" (2mm)
3"	3.500"	0.259"	2.950"	1.160	1/16" (2mm)

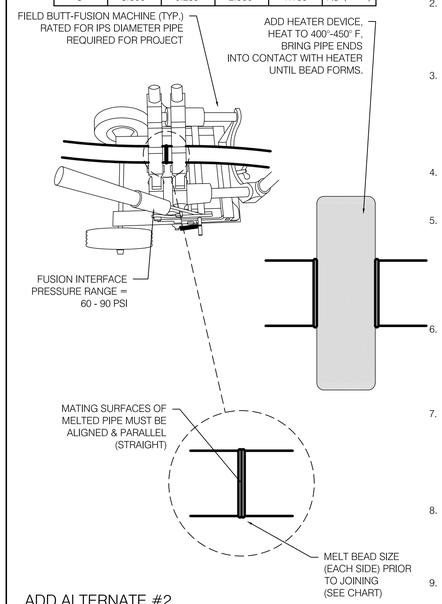

ADD ALTERNATE #2

2 HDPE PIPE INSTALLATION
NOT TO SCALE

ABBREVIATED HDPE BUTT FUSION PROCEDURES
(REFER TO PLASTIC PIPE INSTITUTE TR33 FOR COMPLETE PROCEDURE)

1. SECURE
CLEAN INSIDE AND OUTSIDE OF PIPE TO BE JOINED WITH CLEAN LINT-FREE CLOTH AND REMOVE ALL FOREIGN MATTER. CLAMP PIPE ENDS TO BUTT-FUSION MACHINE. RE-ROUND PIPES AS NECESSARY.

2. FACE
FACE PIPE ENDS TO ESTABLISH CLEAN, PARALLEL MATING SURFACES. USING TRIMMING TOOL, DRAW PIPE ENDS TOGETHER UNTIL SHAVING SIZES MATCH ON EACH SIDE. INSPECT FOR DEFORMITIES WITHOUT TOUCHING FACED SURFACES.

3. ALIGN
DRAW FACED PIPE ENDS TOGETHER. PIPE PROFILES MUST BE ROUNDED AND ALIGNED TO MINIMIZE MIS-MATCHING OF PIPE WALLS. THE FOLLOWING TOLERANCES SHALL BE ADHERED TO FOR ACCEPTABLE ALIGNMENT:
MAXIMUM GAP = 0.02 inches or 0.5mm
MAXIMUM WALL OFFSET = 10% of Wall Thickness

4. MELTING PREPARATION
CLEAN FACED SURFACES WITH GREASE-FREE CLEANER WITH A LINT-FREE CLOTH. DO NOT TOUCH CLEANED SURFACES WITH HANDS.

5. MELT
USE HEATING TOOLS SPECIFICALLY MADE FOR SIMULTANEOUS HDPE PIPE END HEATING WITH INTERNAL THERMOMETERS AND ALIGNMENT GUIDES. SURFACE TEMPERATURE MUST BE BETWEEN 400°-450° F. BRING BOTH PIPE ENDS INTO CONTACT WITH HEATER, INITIALLY, UNDER MODERATE PRESSURE BRIEFLY, THEN RELEASED ONCE CONTACT ESTABLISHED. WHEN PROPER BEAD SIZE HAS BEEN ACHIEVED, REMOVE HEATER AND JOIN PIPE

6. JOINING
QUICKLY INSPECT PIPE AFTER HEATER IS REMOVED. START OVER IF CONCAVE OR IRREGULAR MELT SURFACES OCCUR. IF ACCEPTABLE, IMMEDIATELY DRAW MOLTEN PIPE ENDS TOGEHER WITH SUFFICIENT FUSION FORCE (60 - 90 PSI) TO FORM A DOUBLE ROLLBACK BEAD AGAINST THE PIPE WALL.

7. HOLD
HOLD THE JOINT IMMOBILE UNDER FUSION FORCE UNTIL THE JOINT HAS COOLED ADEQUATELY TO DEVELOP STRENGTH. ALLOW PROPER COOLING TIME BEFORE REMOVING CLAMPS. FUSION FORCE SHOULD BE HELD BETWEEN PIPE ENDS FOR APPROXIMATELY 30 - 90 SECONDS PER INCH OF PIPE DIAMETER. AVOID PULLING, INSTALLATION OR ROUGH HANDLING FOR AN ADDITIONAL 30 MINUTES AFTER COOLING.

8. INSPECTION
CHECK AND COMPARE JOINT AGAINST MANUFACTURER'S RECOMMENDED APPEARANCE GUIDELINES. VISUALLY UNACCEPTABLE JOINTS SHOULD BE CUT OUT AND RE-FUSED USING THE CORRECT PROCEDURE.

9. BEAD REMOVAL
WHERE NECESSARY, REMOVE EXTERNAL BEADS WITH MANUFACTURER RECOMMENDED TOOLS. CHECK, BEND, AND TWIST REMOVED BEAD. BEADS THAT RIP, TEAR, OR KINK SHALL BE INDICATIVE OF A POOR JOINT AND PROCESS SHALL BE RESTARTED.

ADD ALTERNATE #2

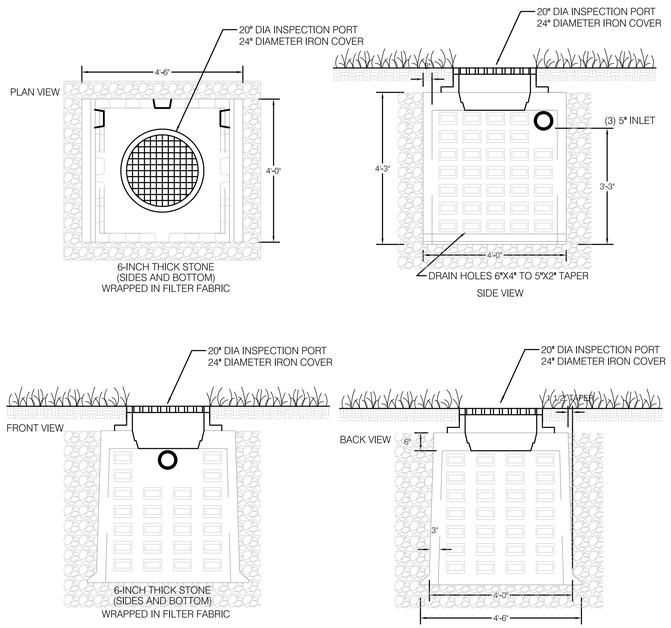

NOTES:
1. CONCRETE: 4,000 PSI MINIMUM AFTER 28 DAYS.
2. DESIGNED FOR AASHTO HS-20 LOADING, 1 TO 3 FT COVER.

3 DRY WELL INSTALLATION
NOT TO SCALE

ADD ALTERNATE #2

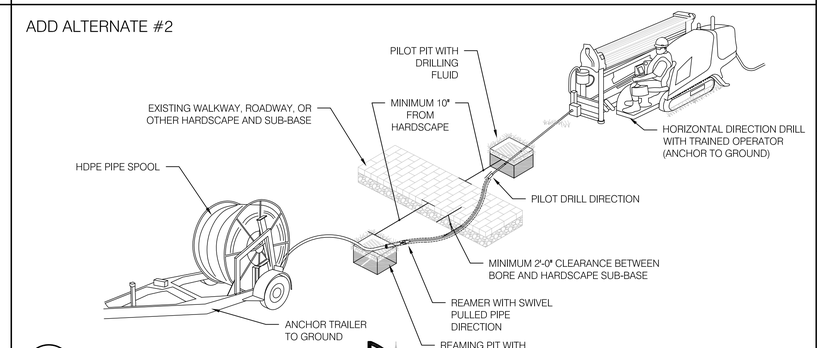

4 DIRECTIONAL DRILL INSTALLATION
NOT TO SCALE

ADD ALTERNATE #2

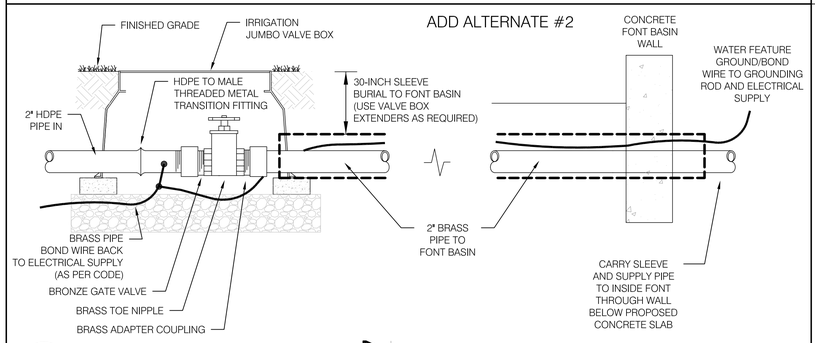

5 HDPE TRANSITION TO BRASS PIPE
NOT TO SCALE

WATER FEATURE DESIGN BY:

Aqueous

AQUEOUS CONSULTANTS, LLC
2 Dundee Park Drive, Suite 301B
Andover, MA 01810
(978) 470-1695
www.aqueous.net

kmdg
KLOPFER MARTIN DESIGN GROUP

69 CANAL STREET | 2ND FLOOR
BOSTON, MA 02114
t: 617.227.2560
info@klopfermartin.com

CLIENT:

TOWN OF BROOKLINE
333 WASHINGTON STREET
BROOKLINE, MA 02445

COMMONWEALTH OF MASSACHUSETTS
MICHAEL GOO
CIVIL
No. 46496
REGISTERED PROFESSIONAL ENGINEER

JULY 6, 2020

REVISIONS:

REV DATE NOTE

PROJECT:

LARZ LAGOON STRUCTURES
PROJECT # 1811
BROOKLINE, MA 02445

DRAWING:

MECHANICAL WATER FEATURE DETAILS

BID SET

DRAWN: REVIEW:

SCALE:

DATE:
JULY 6, 2020

SHEET:

WF-2

BASE BID EQUIPMENT

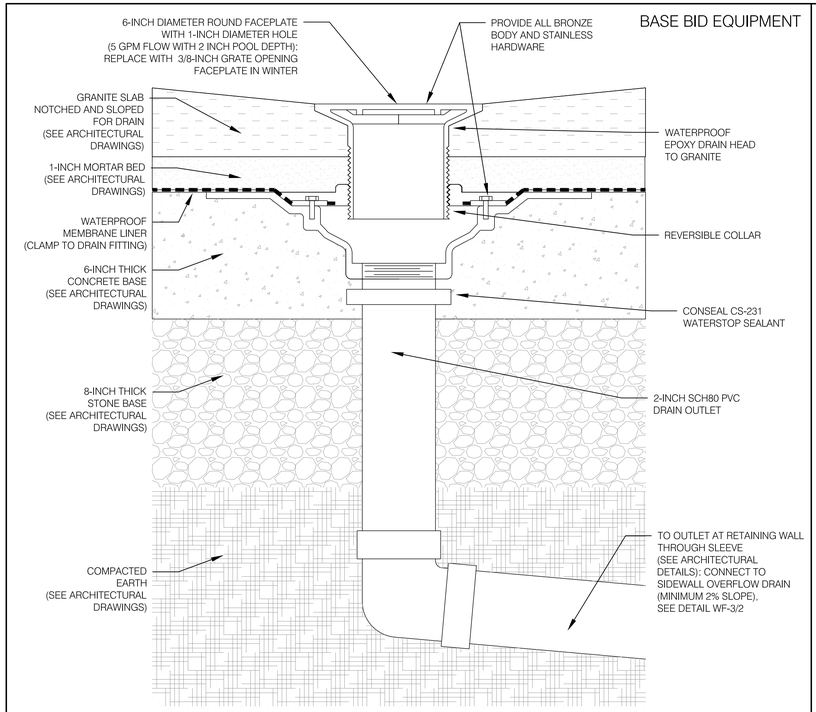

1 FLOOR DRAIN
NOT TO SCALE

BASE BID EQUIPMENT

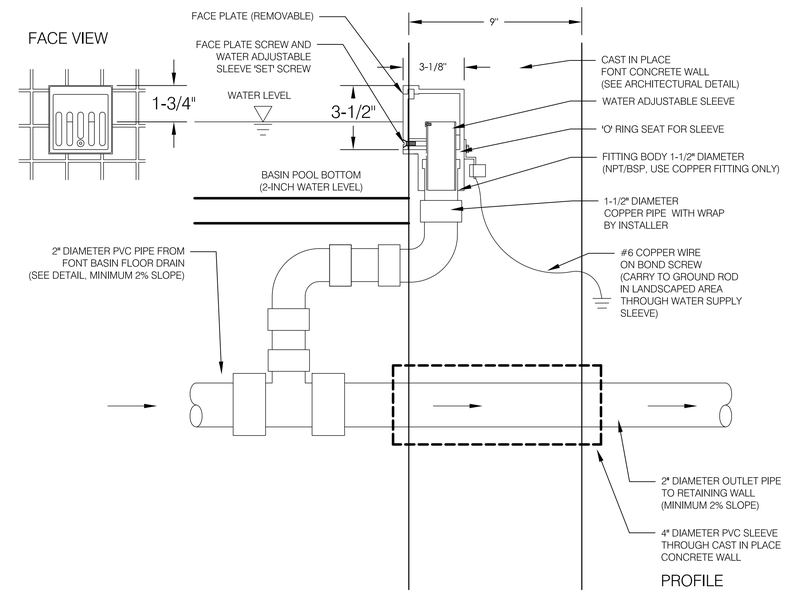

2 SIDEWALL OVERFLOW DRAIN
NOT TO SCALE

ADD ALTERNATE #2

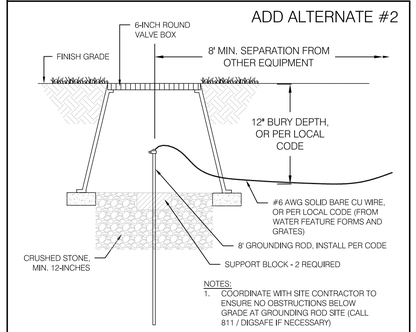

NOTES:
1. COORDINATE WITH SITE CONTRACTOR TO ENSURE NO OBSTRUCTIONS BELOW GRADE AT GROUNDING ROD SITE (CALL 811 / DIGSAFE IF NECESSARY)

3 GROUNDING ROD INSTALLATION
NOT TO SCALE

ADD ALTERNATE #2 WATER FORM OPTION

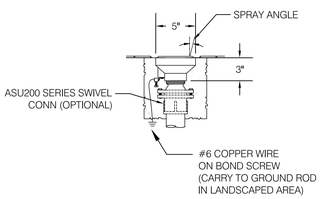

4 GROUND JET
NOT TO SCALE

ADD ALTERNATE #2 WATER FORM OPTION

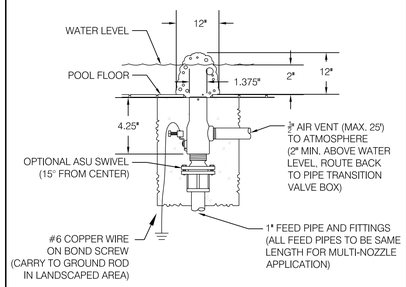

5 FOAM JET
NOT TO SCALE

ADD ALTERNATE #2 WATER FORM OPTION

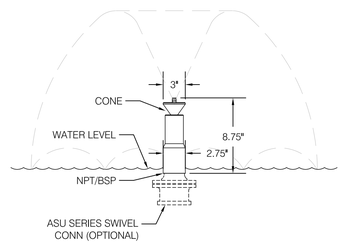

6 TULIP JET
NOT TO SCALE

WATER FEATURE DESIGN BY:

Aqueous

AQUEOUS CONSULTANTS, LLC
2 Dundee Park Drive, Suite 301B
Andover, MA 01810
(978) 470-1695
www.aqueous.net

kmdg
KLOPFER MARTIN DESIGN GROUP

69 CANAL STREET | 2ND FLOOR
BOSTON, MA 02114
t: 617.227.2560
info@klopfermartin.com

CLIENT:

TOWN OF BROOKLINE
333 WASHINGTON STREET
BROOKLINE, MA 02445

COMMONWEALTH OF MASSACHUSETTS
MICHAEL IOO
CIVIL
No. 46436
REGISTERED PROFESSIONAL ENGINEER

JULY 6, 2020

REVISIONS:

REV DATE NOTE

PROJECT:

LARZ LAGOON STRUCTURES
PROJECT # 1811
BROOKLINE, MA 02445

DRAWING:

MECHANICAL WATER FEATURE DETAILS

BID SET

DRAWN: REVIEW:

SCALE:

DATE:
JULY 6, 2020

SHEET:

WF-3

ADD ALTERNATE #3

PROPOSED BEDROCK WELL
DIAMETER: ~ 6-INCH
DEPTH: ~ 300'
FLOW: 20 - 40 gpm

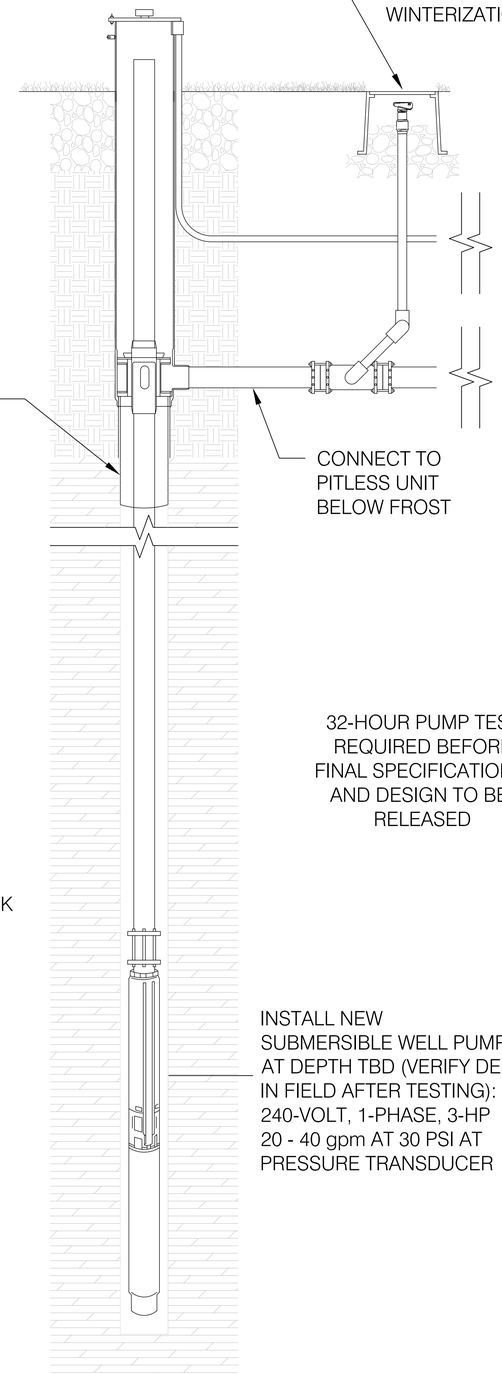

32-HOUR PUMP TEST REQUIRED BEFORE FINAL SPECIFICATIONS AND DESIGN TO BE RELEASED

WATER FEATURE DESIGN BY:

Aqueous

AQUEOUS CONSULTANTS, LLC
2 Dundee Park Drive, Suite 301B
Andover, MA 01810
(978) 470-1695
www.aqueous.net

kmdg
KLOPFER MARTIN DESIGN GROUP

69 CANAL STREET | 2ND FLOOR
BOSTON, MA 02114
t: 617.227.2560
info@klopfermartin.com

CLIENT:

TOWN OF BROOKLINE
333 WASHINGTON STREET
BROOKLINE, MA 02445

COMMONWEALTH OF MASSACHUSETTS
MICHAEL GOO
CIVIL
No. 46496
REGISTERED PROFESSIONAL ENGINEER
PE

JULY 6, 2020

REVISIONS:

REV	DATE	NOTE

PROJECT:

LARZ LAGOON STRUCTURES
PROJECT # 1811
BROOKLINE, MA 02445

DRAWING:

WELL WATER SYSTEM DETAILS

BID SET

DRAWN: REVIEW:

SCALE:

DATE:
JULY 6, 2020

SHEET:

WF-4